SpeedyBee Meteor LED Strip User Manual

Contents

1. LED Strip Wireless Configuration

2. FC Wireless Configuration

3. BOOT Mode

4. Bee35 Meteor LED Installation Instructions

The Meteor LED features an integrated wireless configuration module, enabling easy setup and adjustments via the SpeedyBee APP for your drone.

The Meteor LED is factory-prepared with pre-soldered LED strips for your convenience.Follow the detailed installation steps provided in the sections below.

The Bluetooth configuration module is set by default to automatically turn off the Bluetooth configuration function one minute after power is supplied
(the timer does not count during the configuration).
After the connection is disconnected, it will start a new one-minute timer.

BEC has a red indicator light as the power indicator,
which stays on after power is supplied.
The first LED on the light strip serves as the Bluetooth status indicator:

Solid green: Bluetooth is connected.
Flashing green: Bluetooth is not connected.
Green light off: Bluetooth is turned off.

LED Strip Wireless Configuration

If the flight controller comes with a built-in Bluetooth configuration feature, there is no need to solder TX and RX. You only need to connect V and G to perform wireless configuration of the LED.

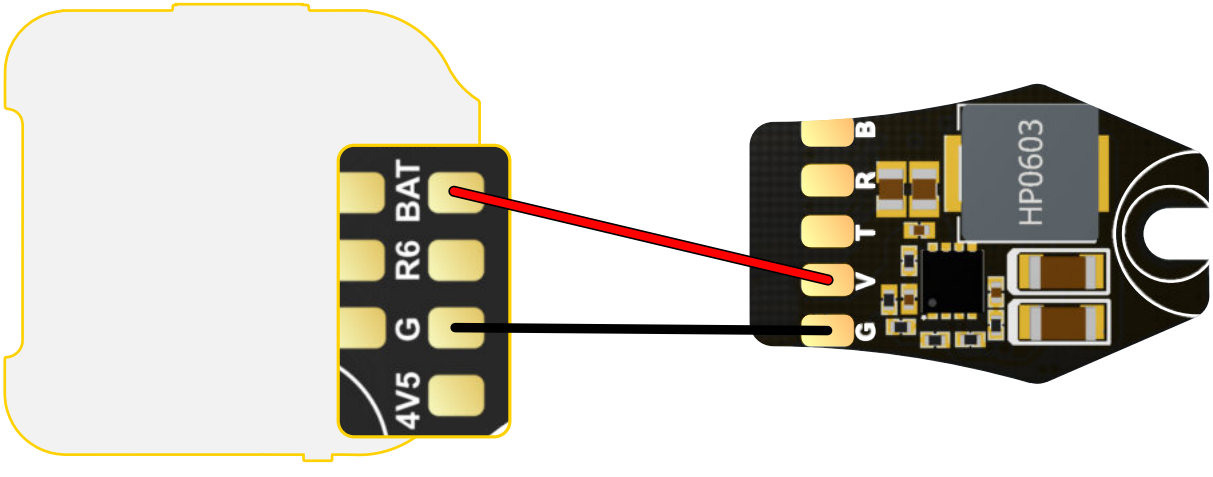

① The red wire should be soldered to the BAT pad of the flight controller or the positive pole of the power cable, with an input voltage range of 2-6S lithium battery.

② The black wire should be soldered to the G pad of the flight controller or the negative pole of the power cable.

FC Wireless Configuration

This feature is for flight controllers without Bluetooth configuration capabilities, with specific soldering instructions as follows.

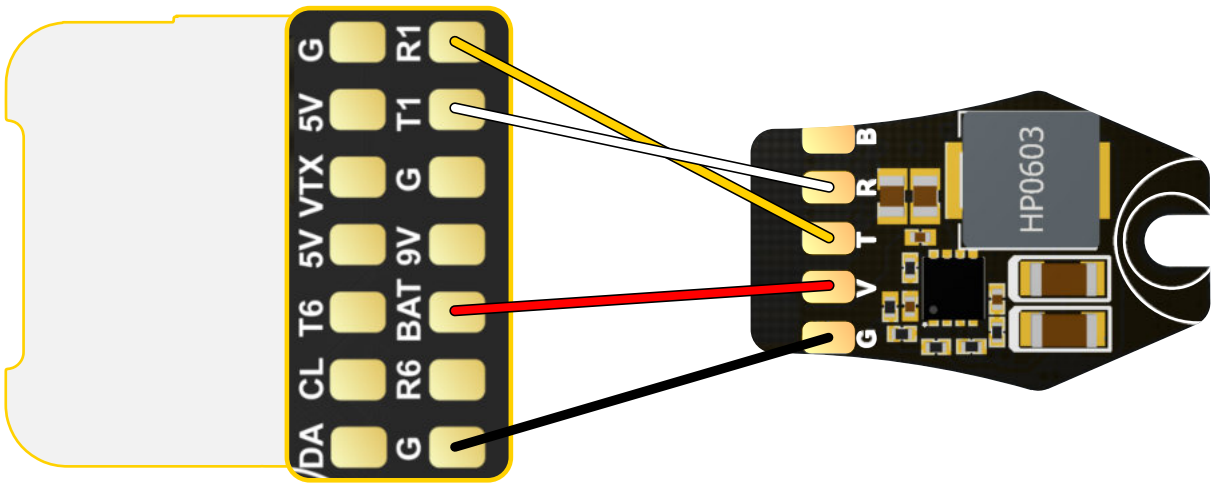

①Solder the red wire to the BAT pad on the flight controller or to the positive pole of the power cable. The input voltage range should be for a 2-6S lithium battery.

② Solder the black wire to the GND pad on the flight controller or to the negative pole of the power cable.

③ Find a set of unused UART on the flight controller. Solder the yellow wire to the RX pad of the UART and the white wire to the TX pad of the UART. For example, using UART 1.

④ Connect the flight controller to the configurators on the computer. Navigate to the ports page, enable the MSP for the relevant UART connected to the Meteor LED, and set the baud rate to 115200. Then click 'Save and Reboot' in the bottom right corner.

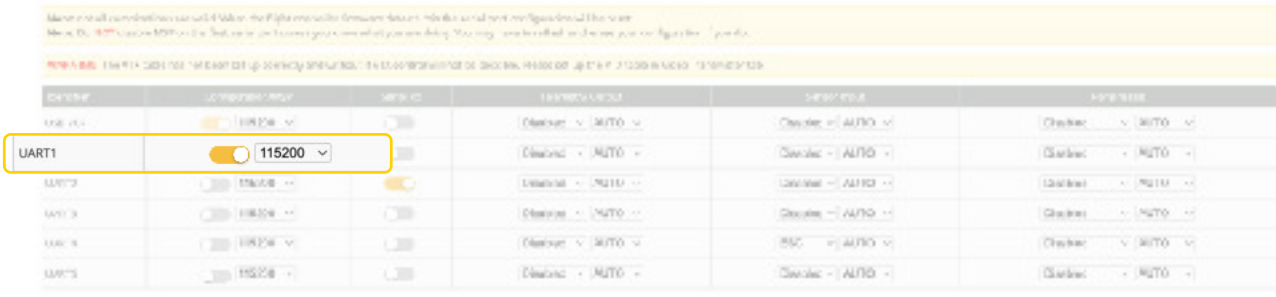

⑤ With all soldering and settings complete, power up the drone and open the SpeedyBee APP. Click the plus sign at the bottom, select 'SpeedyBee MeteorLED'. Once connected, click on 'FC Tuning' for wireless Configuration.

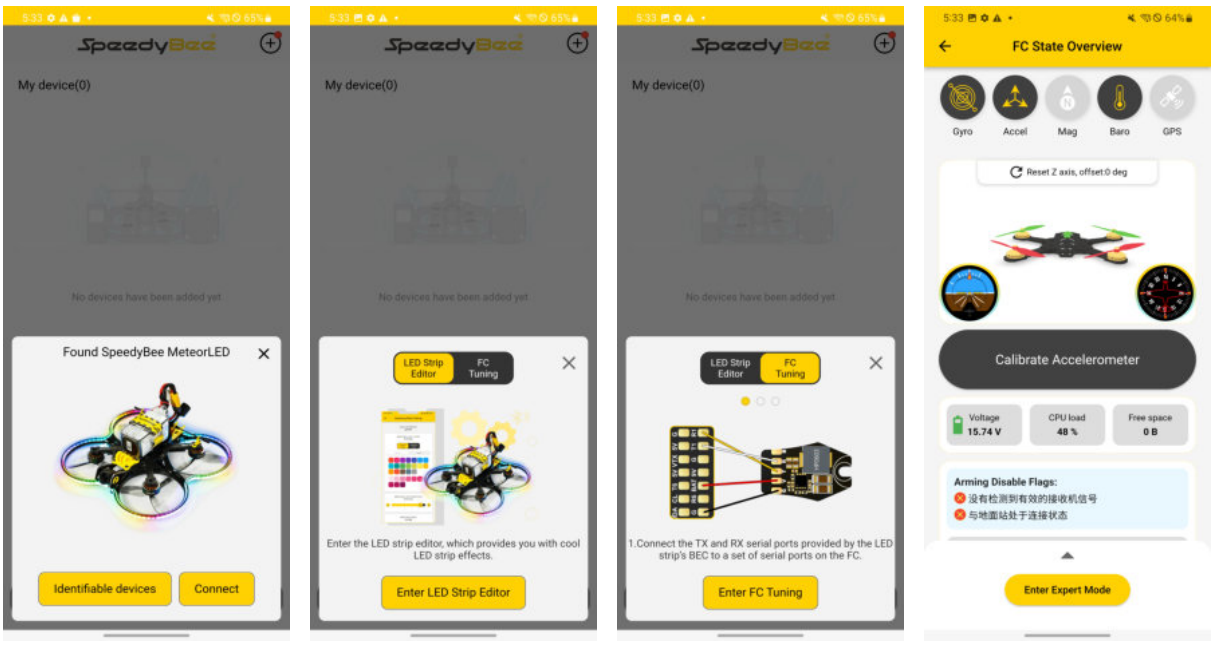

BOOT Mode

The Meteor LED can is used to enter DFU mode on the flight controller through the button on the BEC module. It only supports flight controllers with BOOT solder pads, such as the SpeedyBee F4mini flight controller.

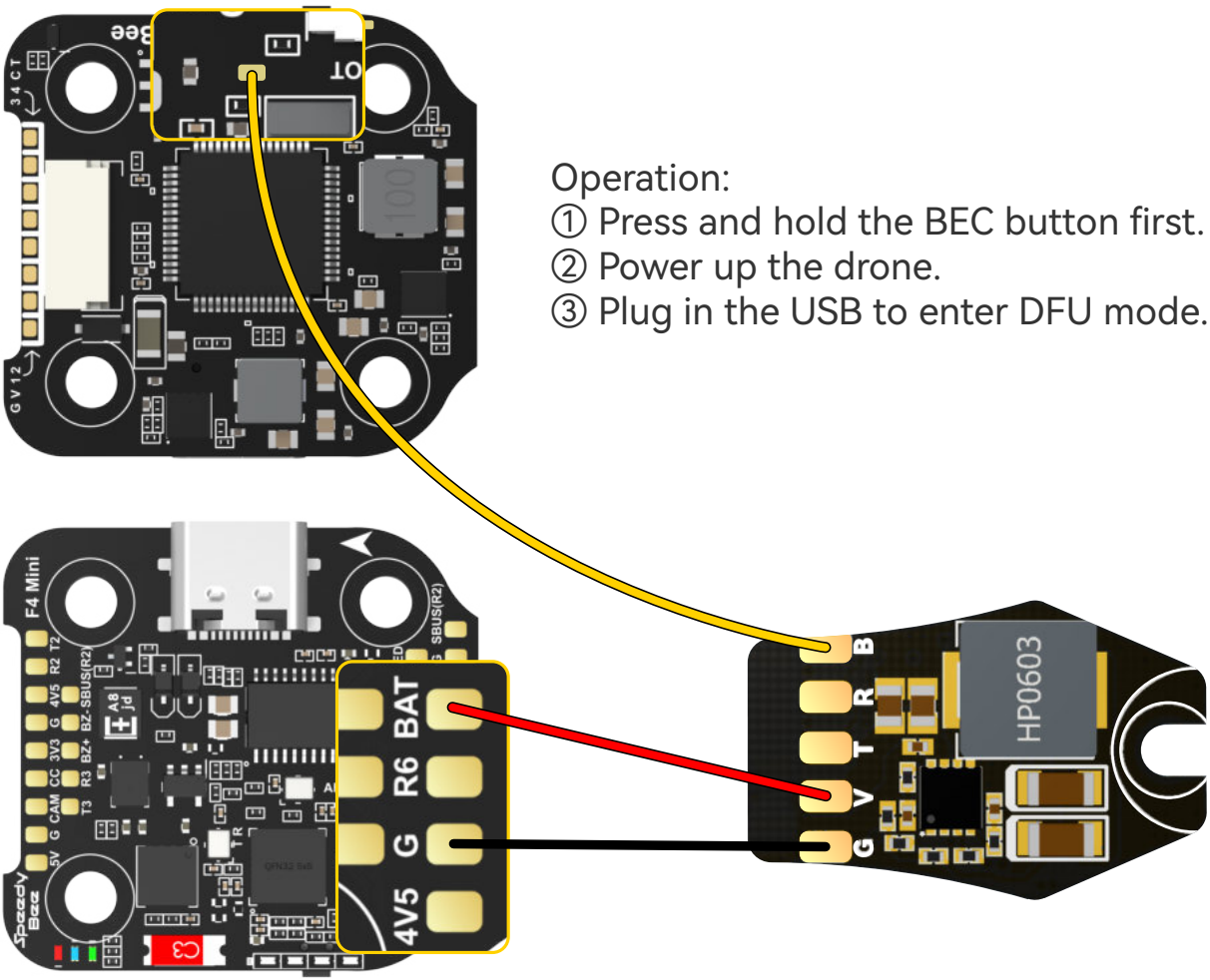

Operation:

① Press and hold the BEC button first.

② Power up the drone.

③ Plug in the USB to enter DFU mode.
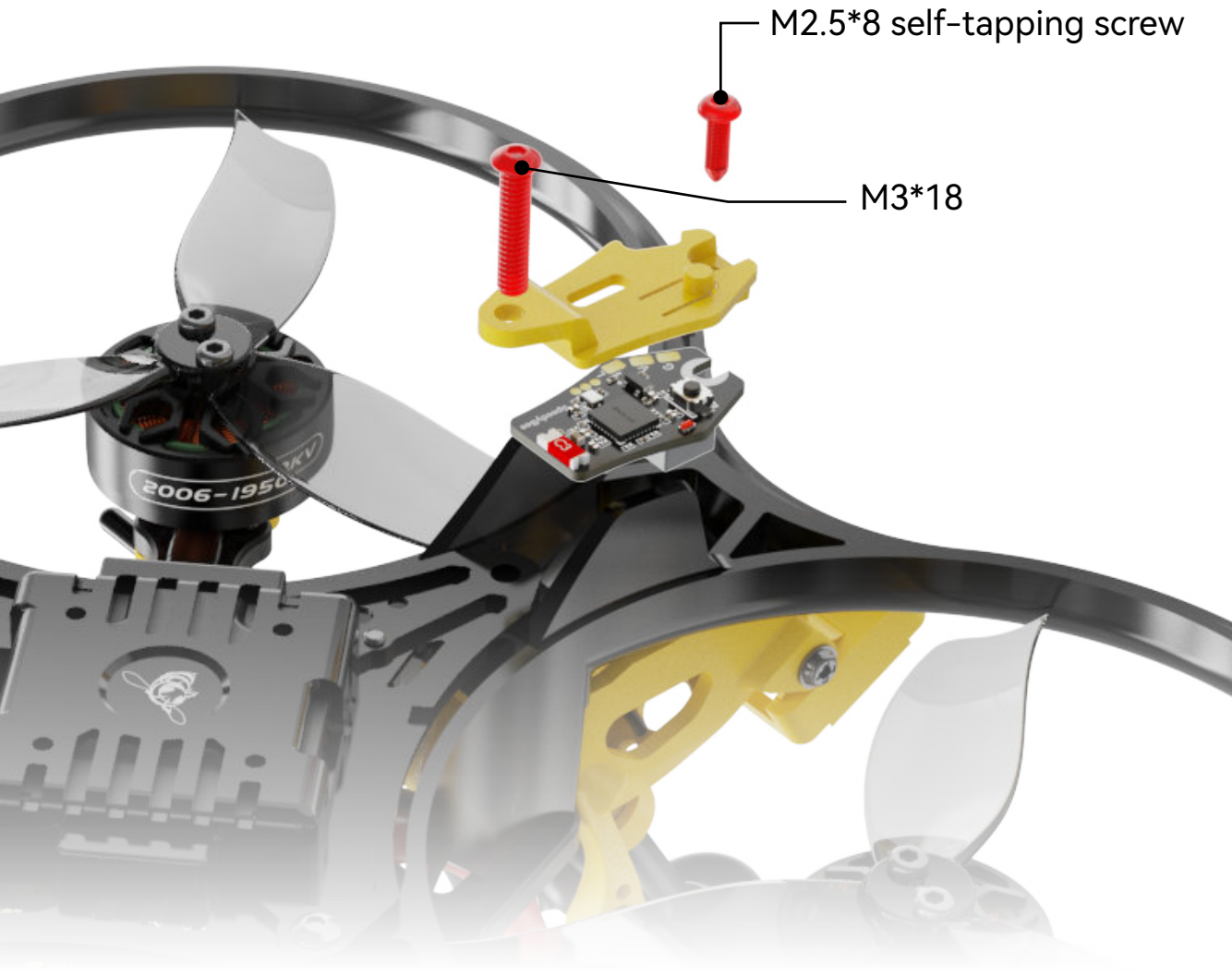
Bee35 Meteor LED
Installation Instructions