ZERODRAG NEXUS1

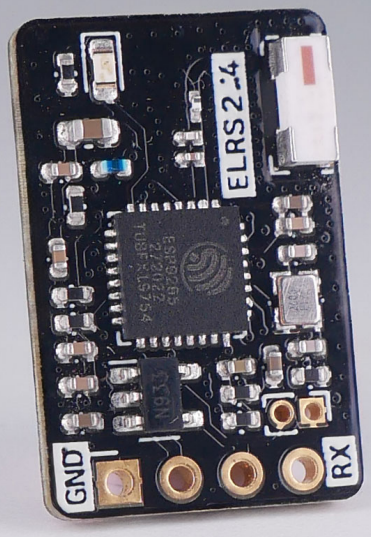

ExpressLRS

ELRS-Supported 2.4GHz Receiver

USER MANUAL

VERSION 1.1
08/02/2024

NEXUS1

INDEX		
CONTENT		PAGE NO.
1	Product Description	3
2	Specifications	3
3	In The Box	3
4	Pinout	4
5	Wiring & Configuration	4
5.1	Betaflight	4
5.2	INAV	6
5.3	PX4 / ARDUPILOT	8
6	Binding	9
6.1	Bind Phrase Method	9
6.2	Conventional Method	10
7	Binding Verification	11
8	Troubleshooting	12
9	Contact	12
10	Reference	12

1. Product Description

The **ZERODRAG Nexus1** receiver is built upon the ExpressLRS project, an open-source RC link designed for various RC applications. ExpressLRS is dedicated to optimizing link performance in terms of speed, latency, and range, positioning itself as one of the fastest RC links with impressive long-range capabilities. The receiver, featured in the **ZERODRAG Nexus1**, surpasses the stability of signal transmission compared to old generation 2.4GHz links.

2. Specifications

The ZERODRAG Nexus1 Receiver boasts the following specifications:

- Weight:
  - Receiver: 1.2g
  - T-Antenna: 2.29g
- Dimension: 20mm*13mm
- Maximum Telemetry Power: 10 mW
- Frequency Bands: 2.4GHz ISM
- Input Voltage: 5V
- Antenna Connector: IPEX 1

3. In The Box

1 x Nexus1 receiver
1 x T-Antenna
3 x Heat shrink tube
4 x Silicone cable （Black, Red, Blue, Green）

4. Pinout

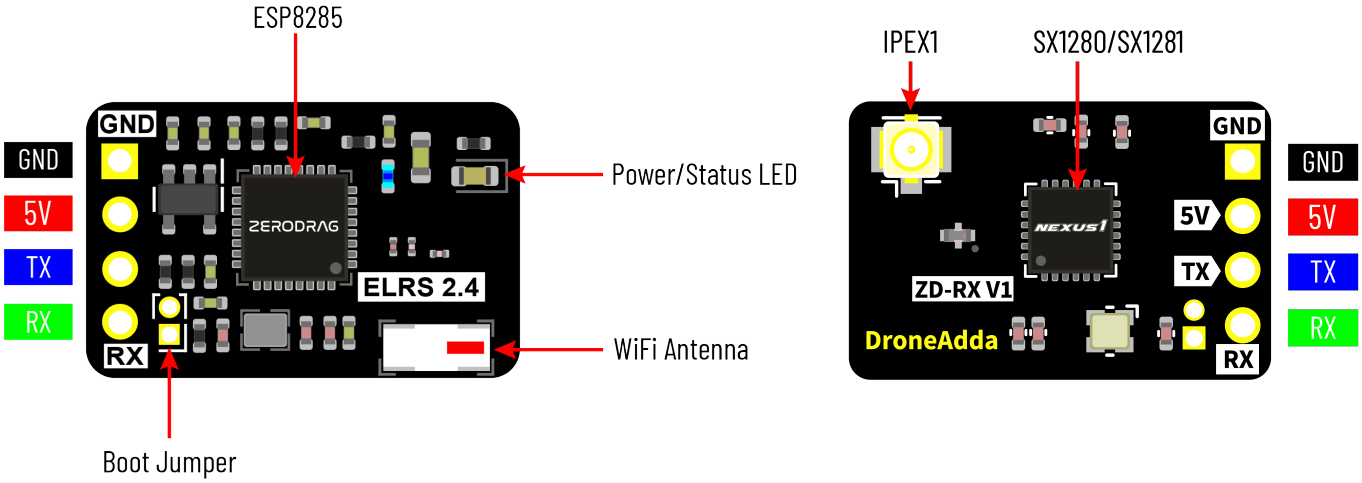

5. Wiring & Configuration

For connecting the ZERODRAG Nexus1 receiver to a flight controller using UART1 with the CRSF protocol:

- Connect **Nexus1's TX** to **UART1 RX** of the Flight Controller and **Nexus1's RX** to **UART1 TX** of the Flight Controller.
- Connect Nexus1 **5V** and **GND** pads to the 5V and ground pads of the flight controller.

5.1. Betaflight

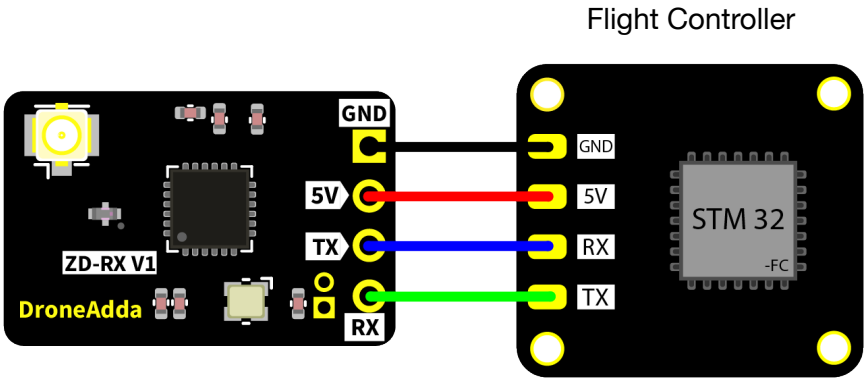

1. In the Betaflight Configurator, assign **UART1** by enabling **Serial Rx** slider for receiver in the **Ports** tab, as shown below.

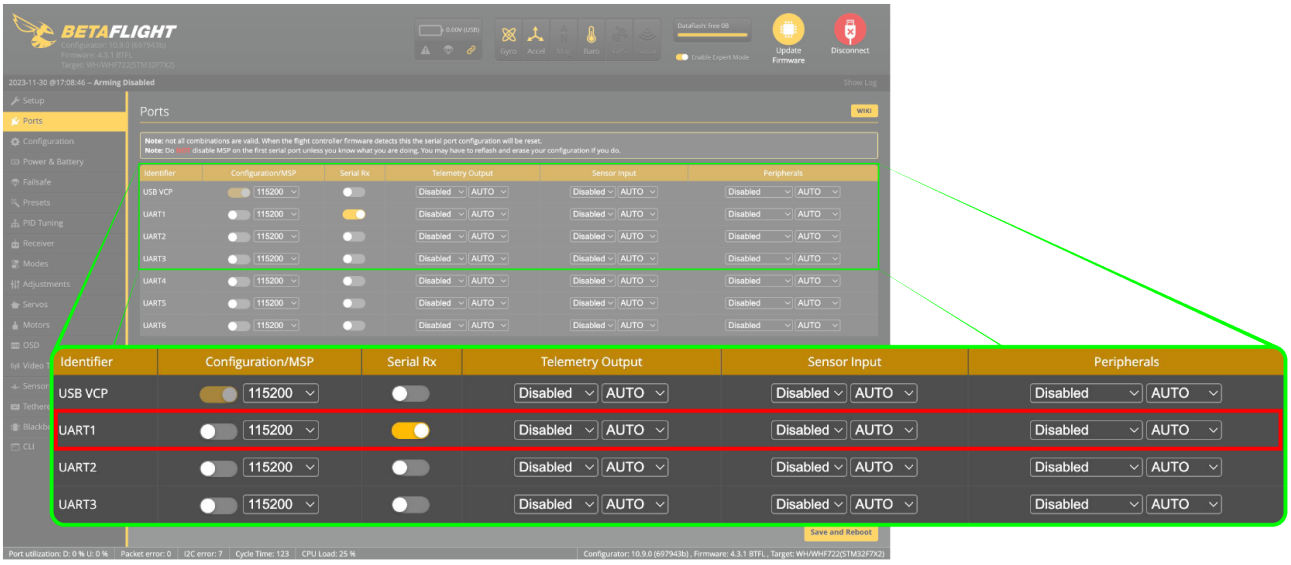

2. In the **Receiver** tab, select **Serial (via UART)** in **Receiver Mode** and choose **CRSF** in **Serial Receiver Provider** from the dropdown, as shown below.

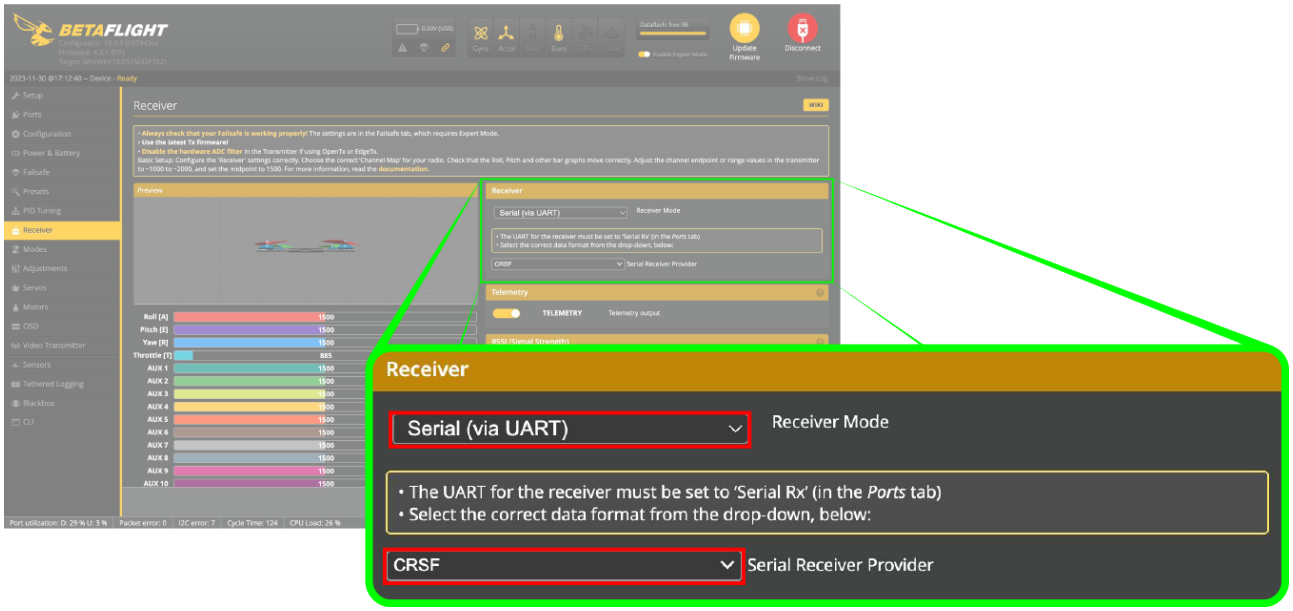

Save changes and reboot the flight controller by selecting the **Save And Reboot** on the bottom right corner.

Note: These steps, using UART1 as an example, provide a concise guide for integrating ZERODRAG Nexus1 with Betaflight firmware. Depending on the free UARTs available on your flight controller, select the appropriate UART as per your wiring with Nexus1 Receiver.

5.2. INAV

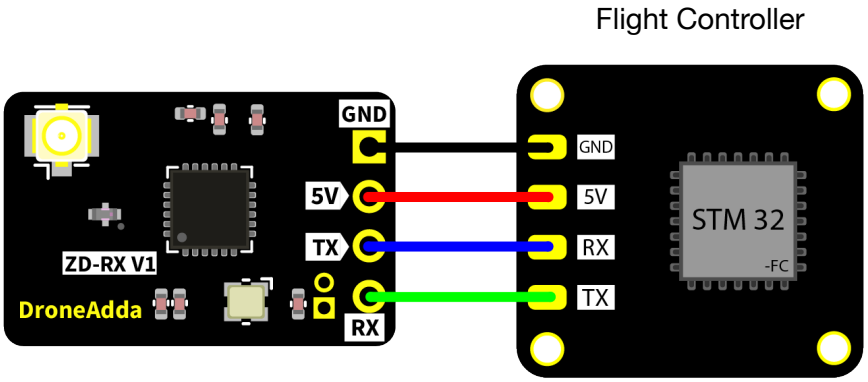

1. In the INAV Configurator, assign **UART1** by enabling **Serial Rx** slider for receiver in the **Ports** tab, as shown below.

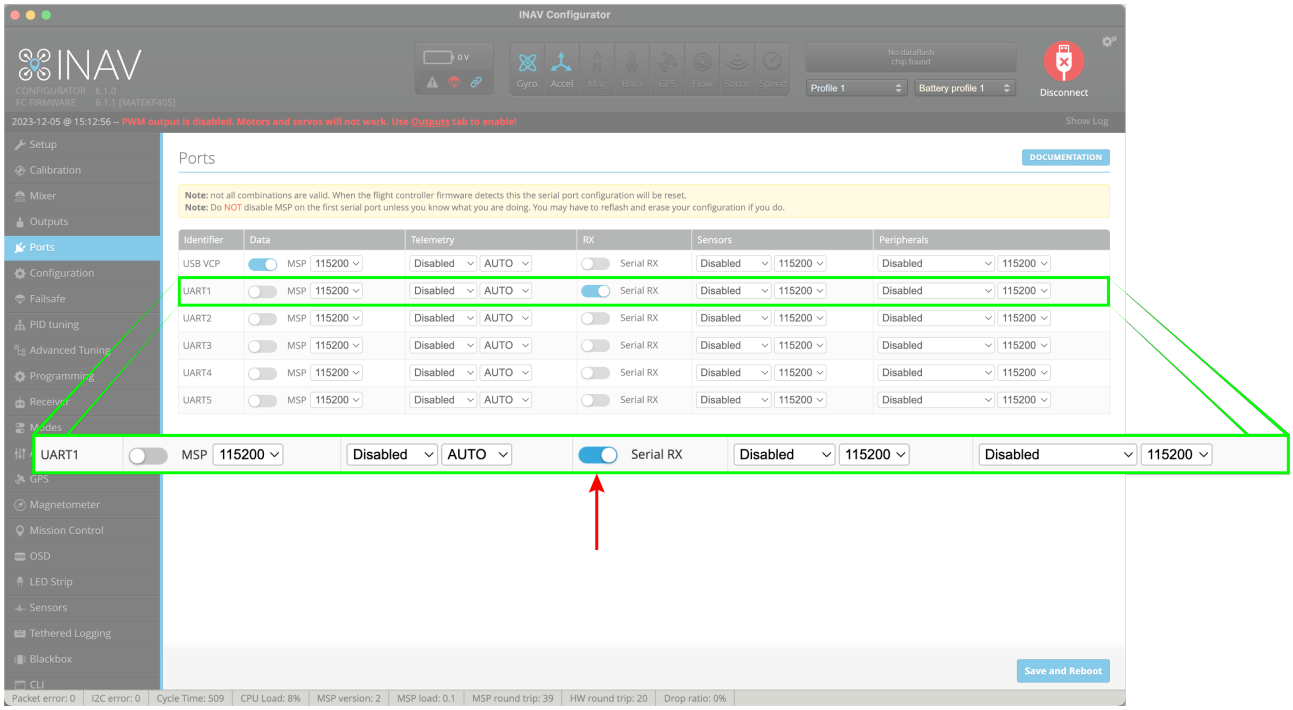

2. In the **Configuration** tab, slide the **Telemetry Output** slider to allow telemetry data to be received on your radio.

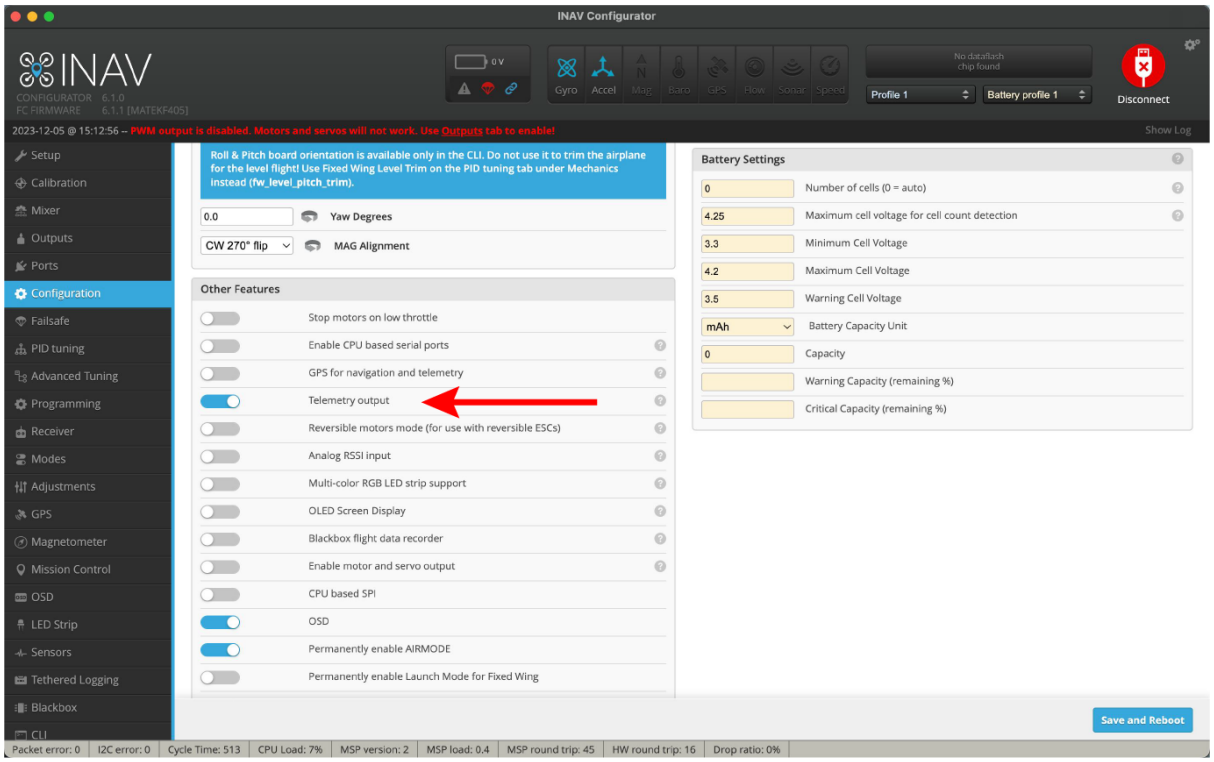

3. In the **Receiver** tab, select **SERIAL** in **Receiver Type** and choose **CRSF** in **Serial Receiver Provider** from the dropdown, as shown below.

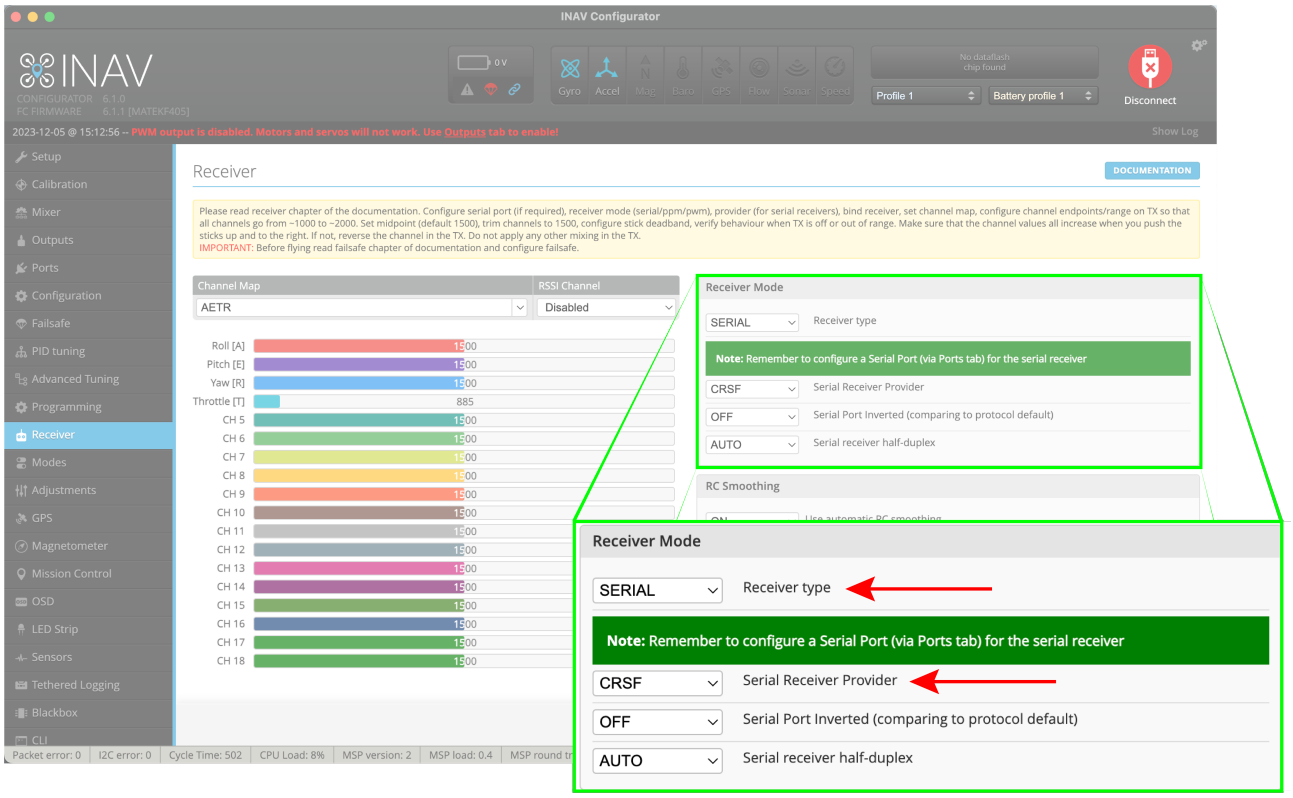

5.3. PX4 / ARDUPILOT

1. Wiring Diagram for **Cube**

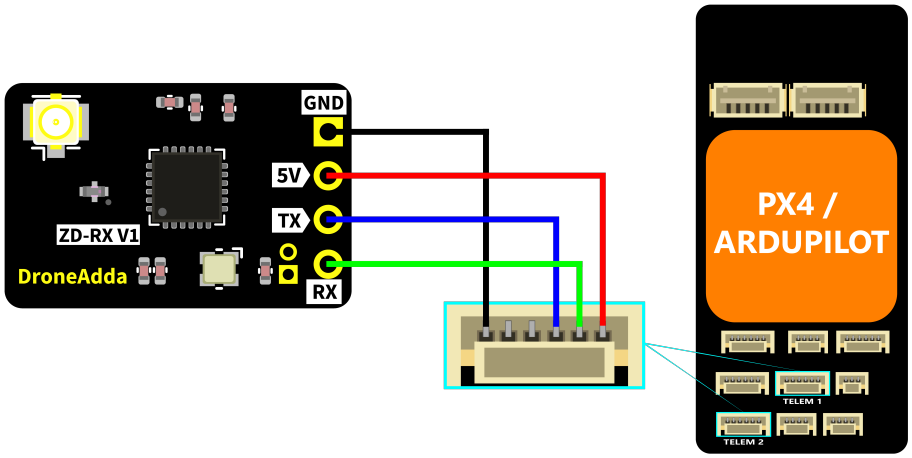

2. In the **Vehicle Setup** tab, select **Parameters** then choose **SERIAL** and assign **RCIN** to **SERIAL 1_PROTOCOL**, as shown below.

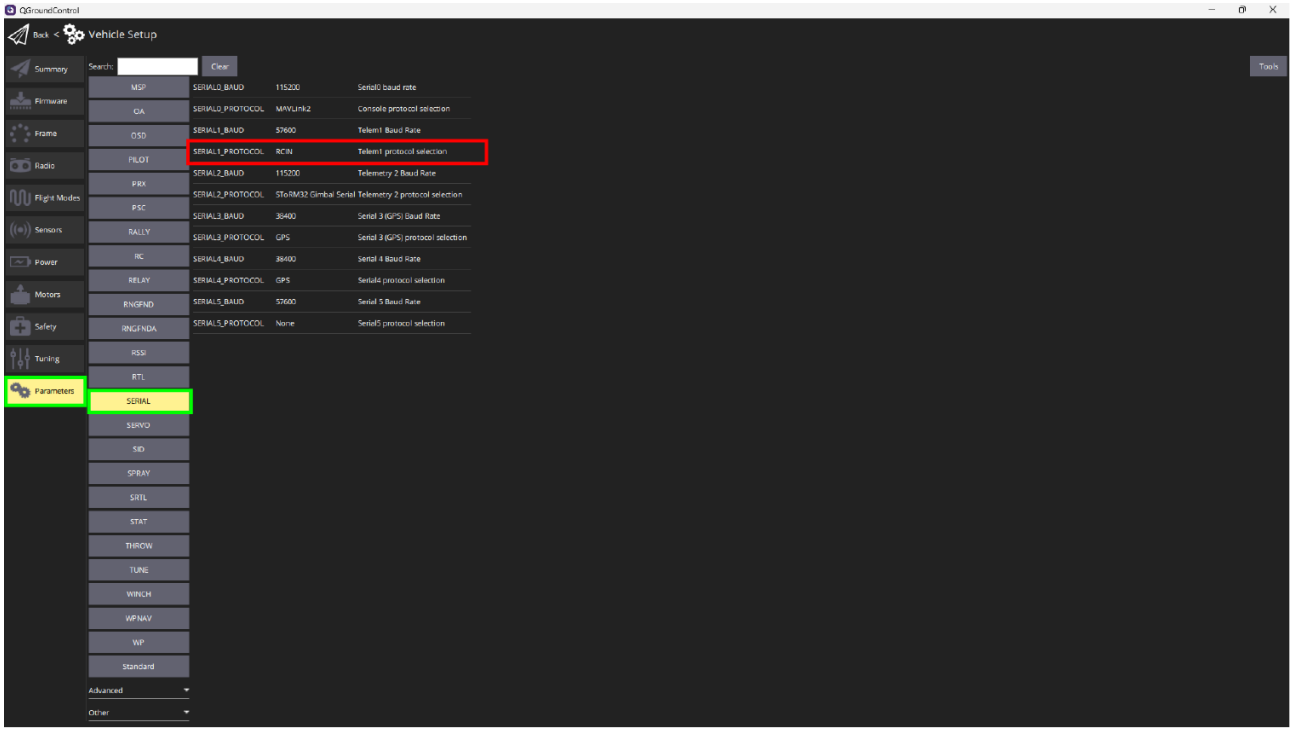

6. Binding

You can bind the Nexus1 receiver with your radio controller using two methods, the Bind Phrase method and the Conventional method. In Bind Phrase method your receiver and radio controller will use a unique bind phrase to exclusively establish a connection between them. A single Bind Phrase can be used to connect multiple receivers to a single radio controller. This ensures a safe and reliable method for connecting the receiver and the radio controller.

In the Conventional method binding is performed by finding the first active radio controller. If multiple radios in the vicinity of the receiver are in binding mode it can lead to a random binding with one of them.

6.1. Bind Phrase Method

1. From **Device Category** dropdown, select **ZeroDrag 2.4 GHz**
2. From **Device** dropdown, select **NexusOne 2.4GHz RX**
3. Select **BINDING_PHRASE** and enter your custom binding phrase.
4. Flash the receiver by clicking the flash button at the bottom of the page.

Note: Ensure that you enter the same Custom binding phrase as on your transmitter.

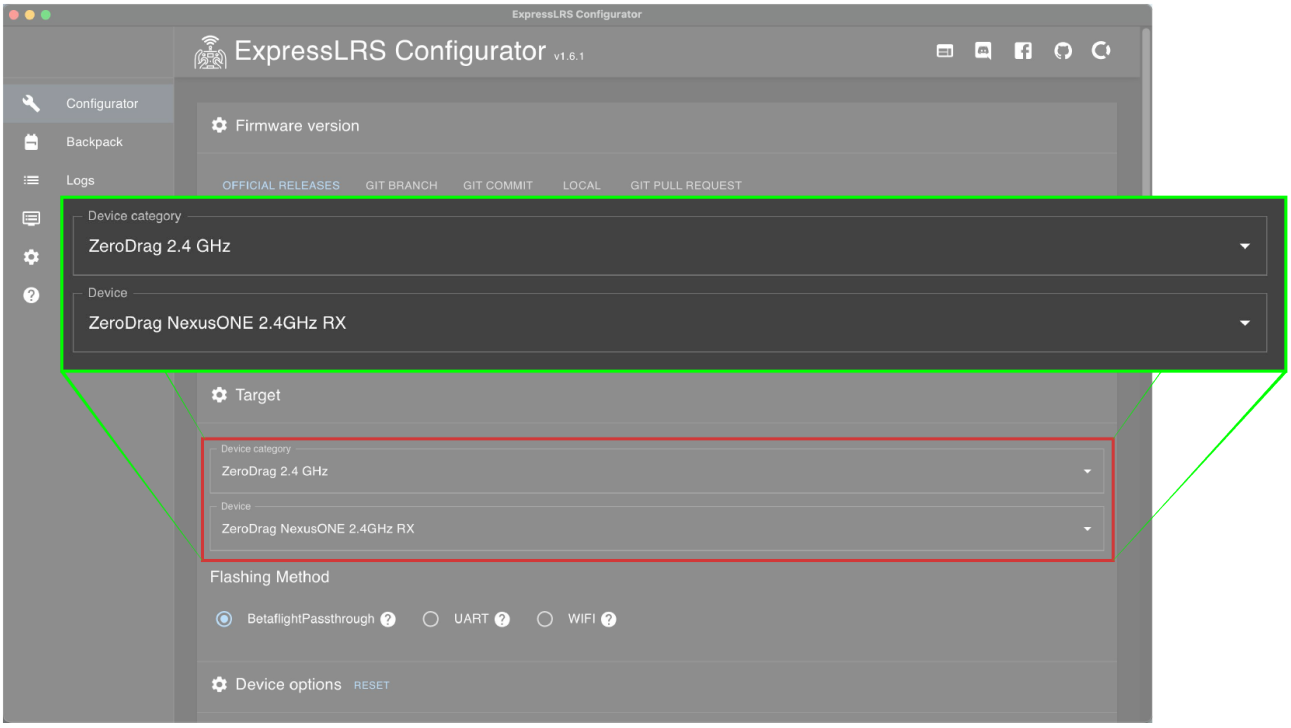

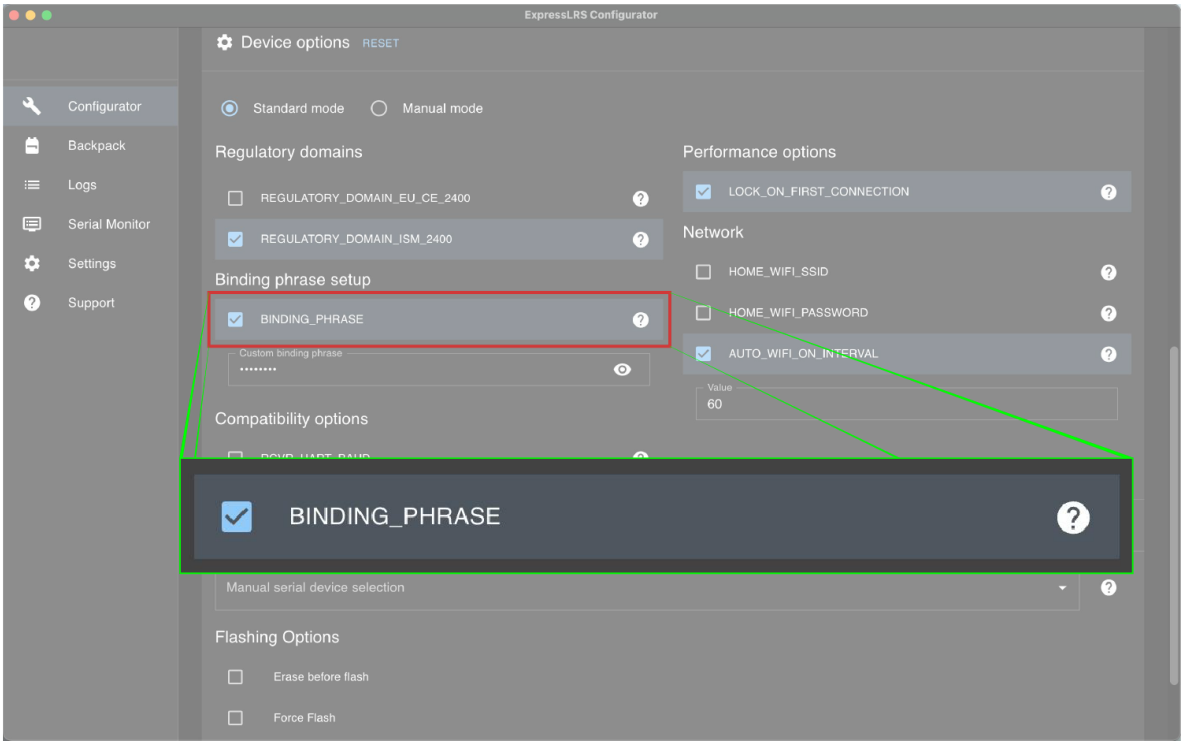

6.2. Conventional Method

The binding process for the Nexus1 ELRS 2.4GHz receiver involves the following steps:

- Power on and off the receiver three times consecutively within a 1-second interval.
- Observe the receiver's LED, which should exhibit a double flashing pattern. This signals that the receiver has entered the binding mode.
- Initiate the binding status on the transmitter module or the radio transmitter. Once the LED status on the receiver changes to a solid light, the binding process is successful.

This concise set of instructions ensures a seamless binding procedure for the Nexus1 ELRS 2.4GHz receiver.

7. Binding Verification

You can verify the Nexus1 receiver's communication link in the configurator software you are using. As an example, the real-time input preview from the Betaflight configurator is shown below. When you move the joysticks on the radio controller you should see the data indicators changing in response.

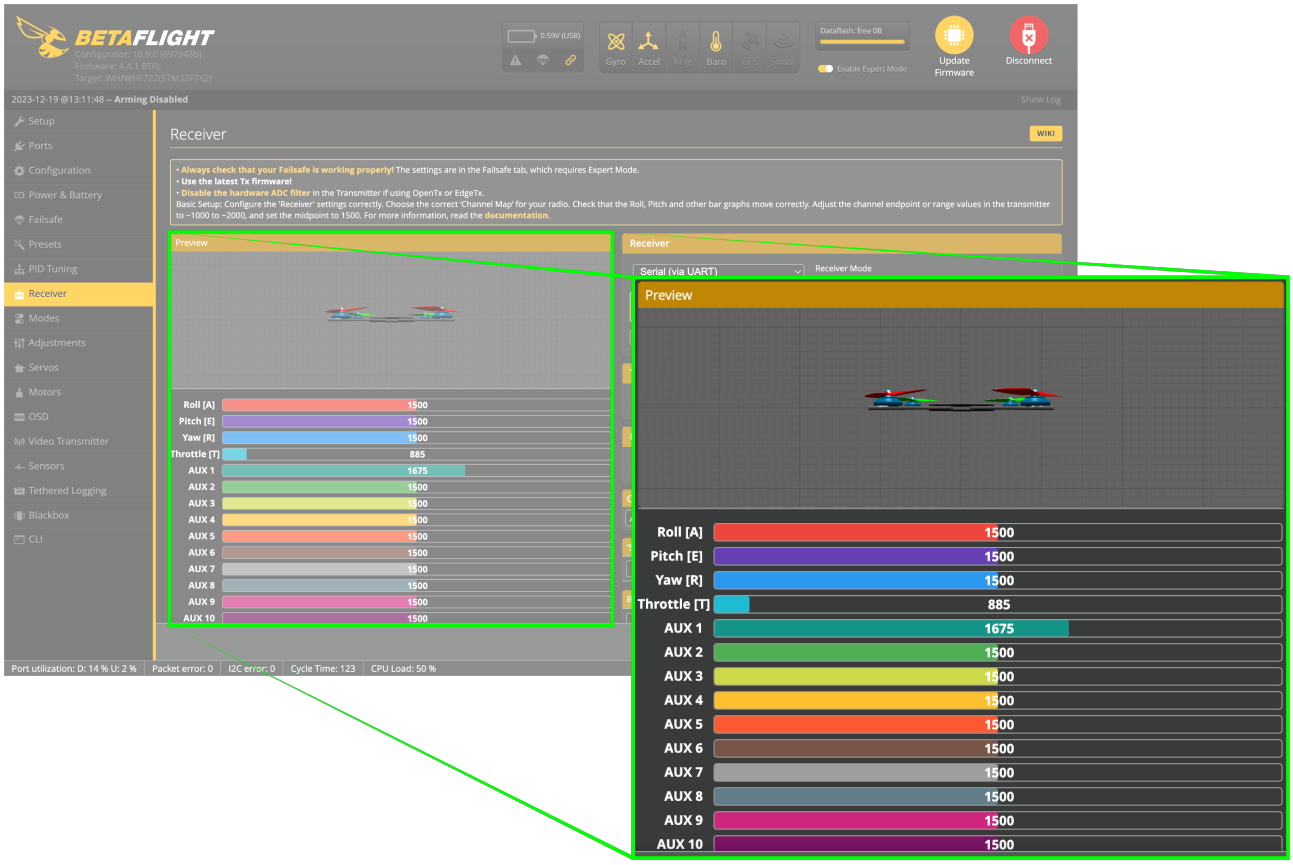

8. Troubleshooting

Receivers with a single color LED communicate their status as follows:

LED Indication	Status
Slow blink 500ms on/off	Waiting for connection from transmitter
Fast blinking 25ms on/off	WiFi mode enabled
Medium speed blink 100ms on/off	Radio chip not detected
Double blink then pause	Binding mode enabled
Triple blink then pause	Connected to transmitter but mismatched model-match configuration
Solid on	Connected to a transmitter, or bootloader mode enabled

For LED status indication animation, you can visit the Betaflight LED Status page in the documentation.

Important: When using the receiver, ensure that the SBUS connection from DJI (Air Units) is disconnected. Failure to do so may result in the RX (receiver) entering boot mode unexpectedly. Please double-check this connection before use to prevent any operational issues.

9. Contact

Website: https://zerodrag.in/
Instagram: https://www.instagram.com/zerodrag.in/
LinkedIn: https://www.linkedin.com/company/zerodrag/
WhatsApp: https://wa.me/9821734544

10. Reference

- ExpressLRS GitHub page: https://github.com/ExpressLRS
- Official ExpressLRS website: https://www.expresslrs.org/.