V1.0

SEQURE

SEQURE H743 V2 Flight Control 飞控说明书

感谢您购买本产品！请您在使用前仔细阅读说明书，严格遵守规定的操作说明，使用者需具备一定电子基础和良好的焊接技术，错误的使用可能造成人身伤害和设备损坏。我们不承担因使用本产品或擅自对产品进行改造而引起的任何责任，包括但不限于对附损失或间接损失的赔偿责任。

Thanks for buying this product! Please read the instructions carefully before use and strictly abide by the specified operating instructions. Users must have a certain electronic foundation and good welding skills. Wrong use may cause personal injury and equipment damage. We do not assume any liability arising from the use of this product or unauthorized modifications to the product, including but not limited to liability for incidental or indirect losses.

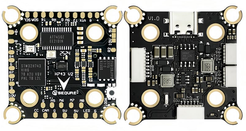

1. English instruction manual ..... 01 - 03

2. 中文说明书 ..... 04 - 06

Note: Once this product is activated and affects secondary sales, it is not eligible for a 7-day return without reason

1 PRODUCT DESCRIPTION

- High-performance STM32H743 MCU, Operating frequency up to 480MHz, rapid control response.
- ICM-42688-P Gyro, Achieve precise posture sensing and stable control, improve system reliability.
- Onboard barometer, OSD, 16MB large-capacity black box, effectively record flight data.
- Reserve 6 UARTS to meet the needs of most devices.
- Controls up to 8 motors, easily constructing X8.
- Equipped with a plug-in connector and dual BEC outputs, it provides independent 10V voltage, allowing the DJI O3 and analog image transmission to plug in for use directly.
- Supports wide voltage input of 4-8S Lipo/LiHV, mounting holes of 20mm and 30.5mm.

2 PRODUCT PARAMETERS

Modle Name	SEQURE H743 V2	**BEC Output**	5V/2.5A, 10V/2A
MCU	STM32H743	**UARTS**	6
Gyro	ICM-42688-P	**Control Motors**	M1-M8
Barometer	BMP280/DPS310/DPS368	**LED**	Support WS2812 LED Strip
OSD Chip	AT7456E	**Buzzer**	Support
Black Box	16MB	**ESC Telemetry**	RX8
Firmware Type	Betaflight (default) , INAV, ArduPilot	**USB**	Type-C
		Mounting Hole	20x20mm , Φ4mm/30.5x30.5mm, Φ4mm
Firmware Name	SEQUREH7V2	**Dimensions**	36.5*36.5*6mm
Input Voltage	4-8S Lipo/LiHV	**Weight**	7.3g

3 SIZE AND WEIGHT

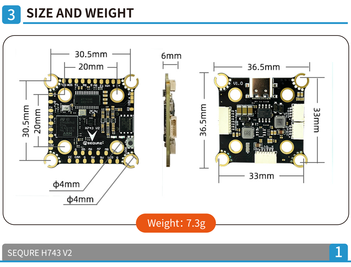

Weight: 7.3g

4 WIRING DIAGRAM

Pad Wiring Diagram

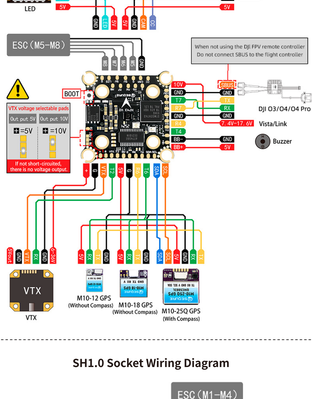

SH1.0 Socket Wiring Diagram

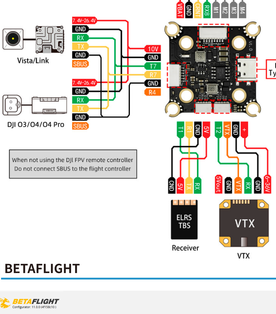

5 BETAFLIGHT

▲ Updated firmware version of FC

For firmware version 4.60 and above, you need to use the web version of Betaflight Configurator.

Website: https://app.betaflight.com/

6 WARRANTY TERMS

1. For those performance faults caused by non-human factors within 3 months from the date of purchase, we provide repair & maintenance service for free. After 3 months, no labor fee will be charged for repairs. If you would like to replace parts, you must pay for the cost.
2. All man-made damage, faults caused by self disassembly & improper use, and all consumables like soldering tips are not covered by the warranty.

7 SAFETY PRECAUTIONS ⚠

●Please do not flash unofficial firmware to avoid damage to the ESC.
●Please do not use it beyond the ESC operating voltage and current range.
●Please check and make sure the positive and negative polarity are correct before powering on.
●Please use the product in compliance with local regulations and ensuring safety.
●Please use accessories that meet safety standards and store them out of reach of children.

www.sequremall.com

info@sequremall.com

注：此产品一经启用及影响2次销售，启用不支持7天无理由退货

1 产品描述

- STM32H743高性能处理器，运行频率高达480MHz，控制响应迅速。
- ICM-42688-P 陀螺仪，实现精准的姿态感知和稳定控制，提高系统可靠性。
- 板载气压计，OSD，16MB大容量黑匣子，有效记录飞行数据。
- 预留6组串口，满足大部分设备使用。
- 最多支持控制8个电机，轻松构造X8。
- 配备直插式连接座，双BEC输出，提供独立的10V支持DJI O3和模拟图传直插使用。
- 支持宽电压输入4-8S Lipo/LiHV，20mm和30.5mm安装孔位。

2 产品参数

产品名称	SEQURE H743 V2
处理器	STM32H743
陀螺仪	ICM-42688-P
气压计	BMP280/DPS310/DPS368
OSD芯片	AT7456E
黑匣子	16MB
固件类型	Betaflight（默认），INAV，ArduPilot
固件名称	SEQUREH7V2
输入电压	4-8S Lipo/LiHV

BEC输出	5V/2.5A，10V/2A
串口	6个
电机控制	M1-M8
LED	1路2812编程LED
蜂鸣器	支持
电调遥测	RX8
USB	Type-C
安装孔距	20x20mm，Φ4mm/30.5x30.5mm，Φ4mm
产品尺寸	36.5*36.5*6mm
产品重量	7.3g

3 尺寸重量

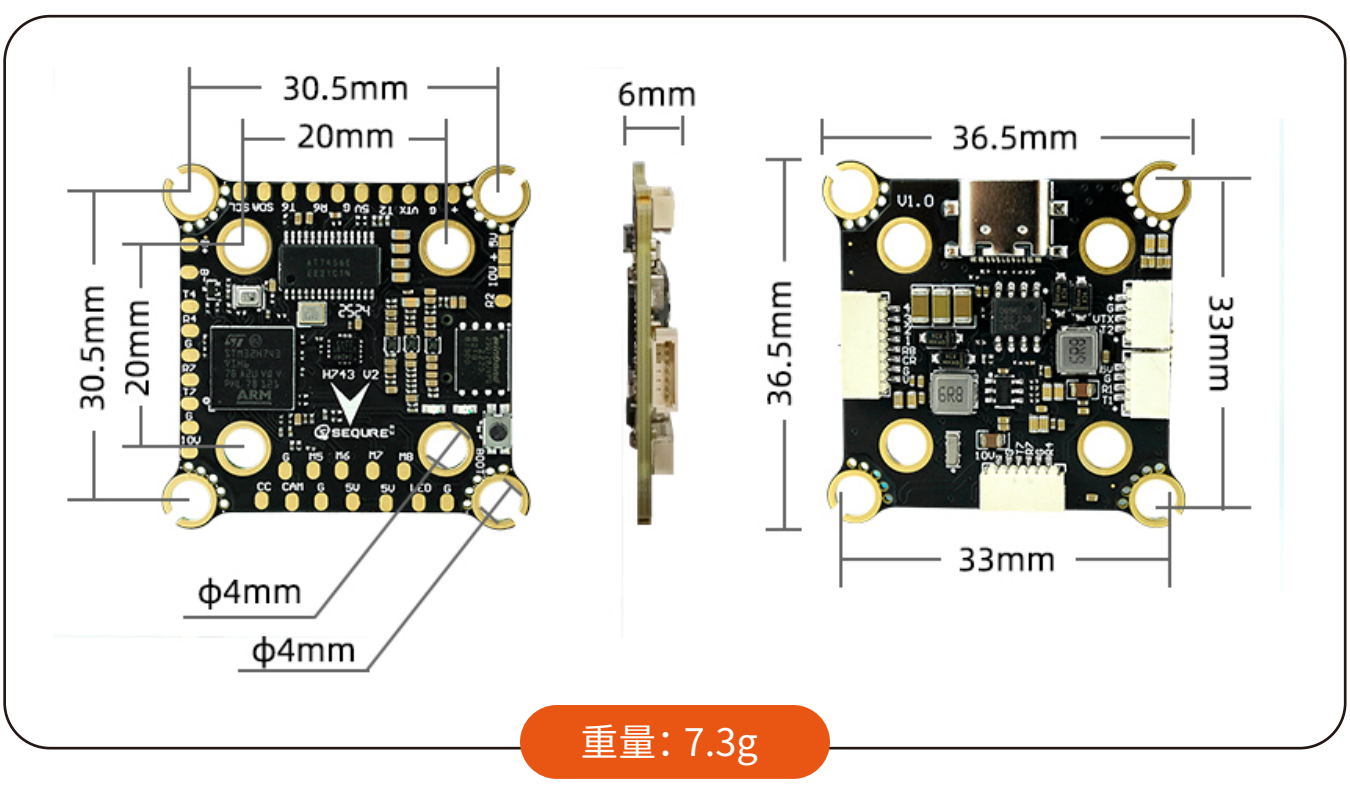

重量：7.3g

4 接线图

焊盘接线图

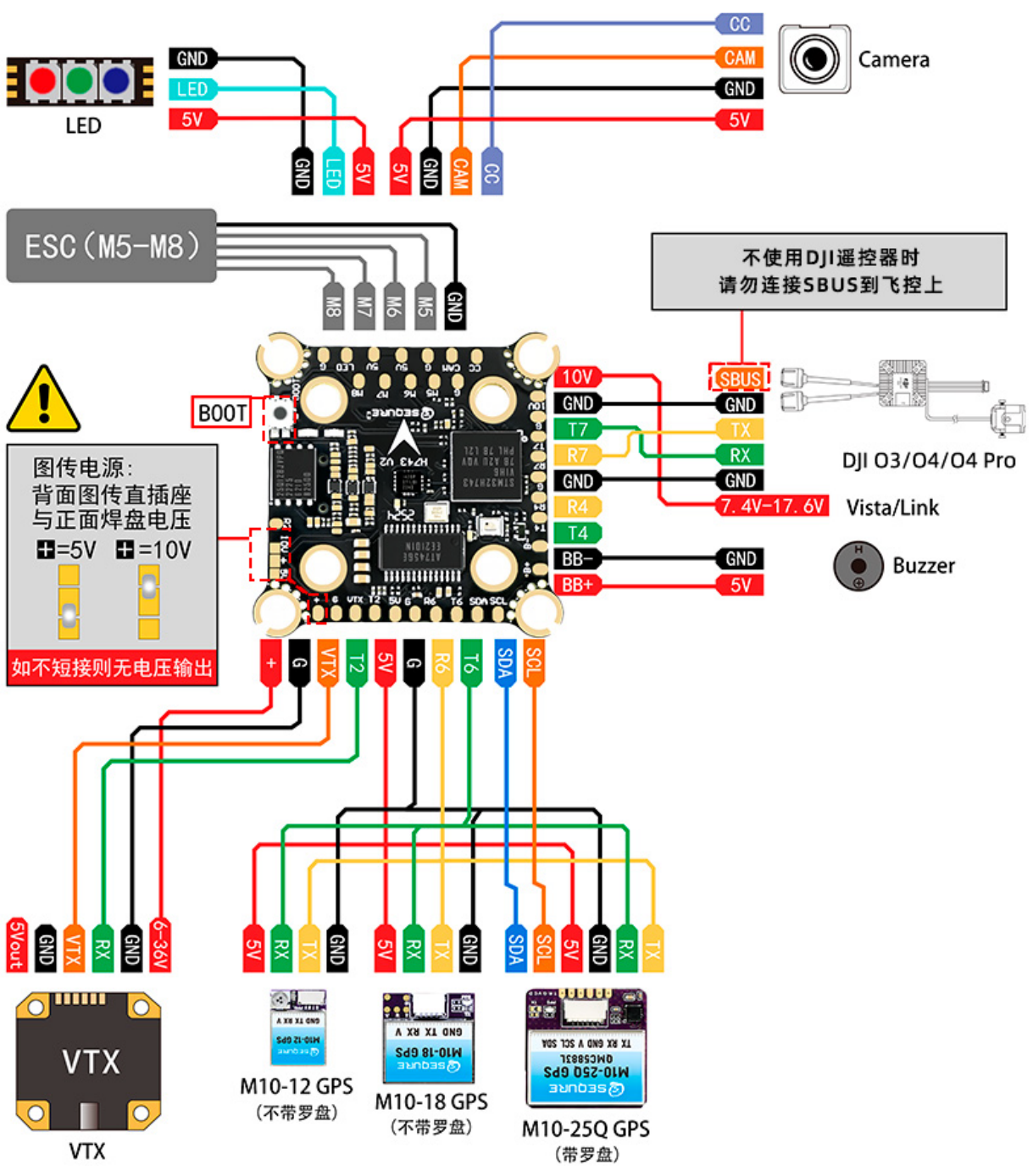

SH1.0插座接线图

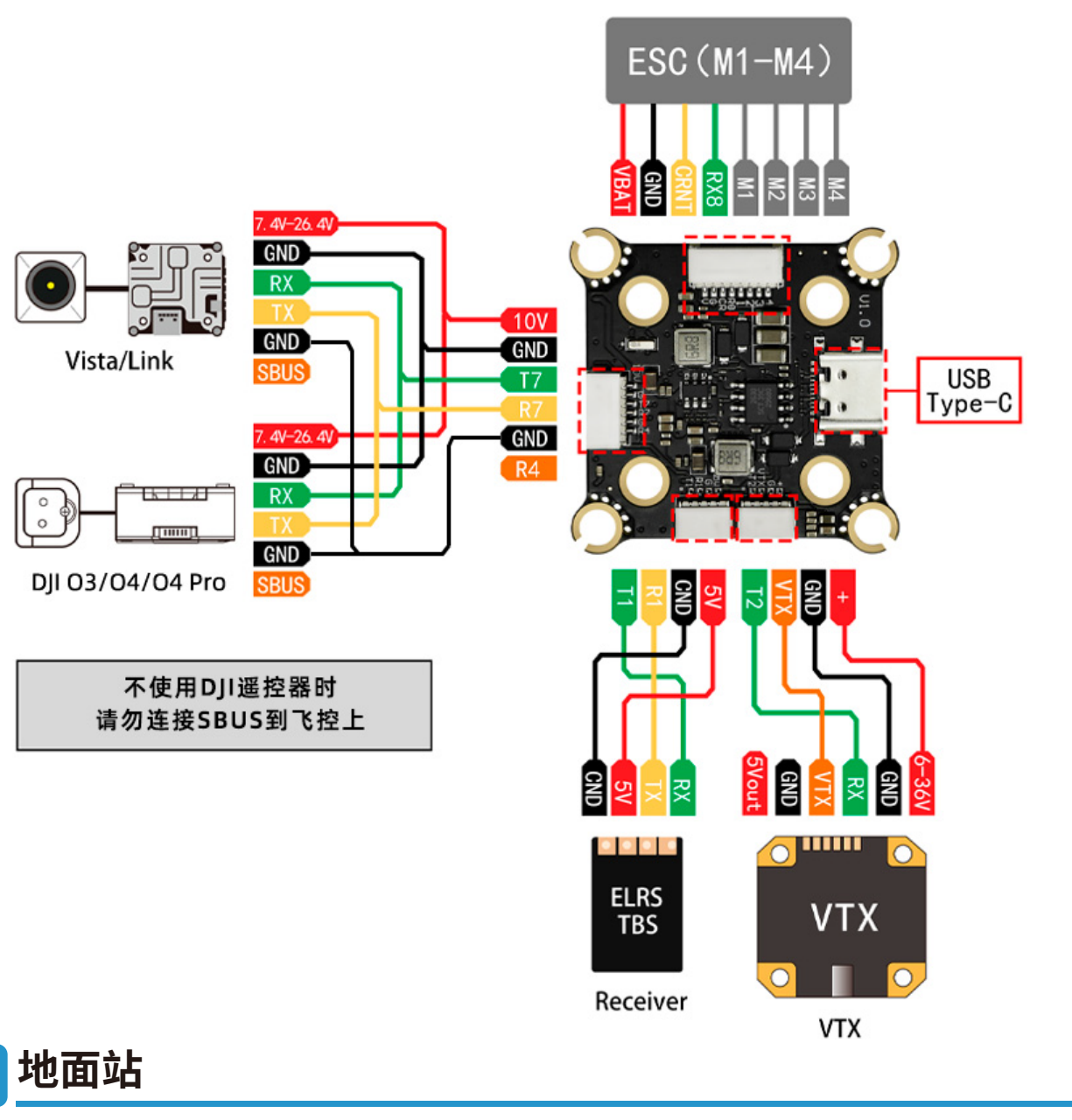

5 地面站

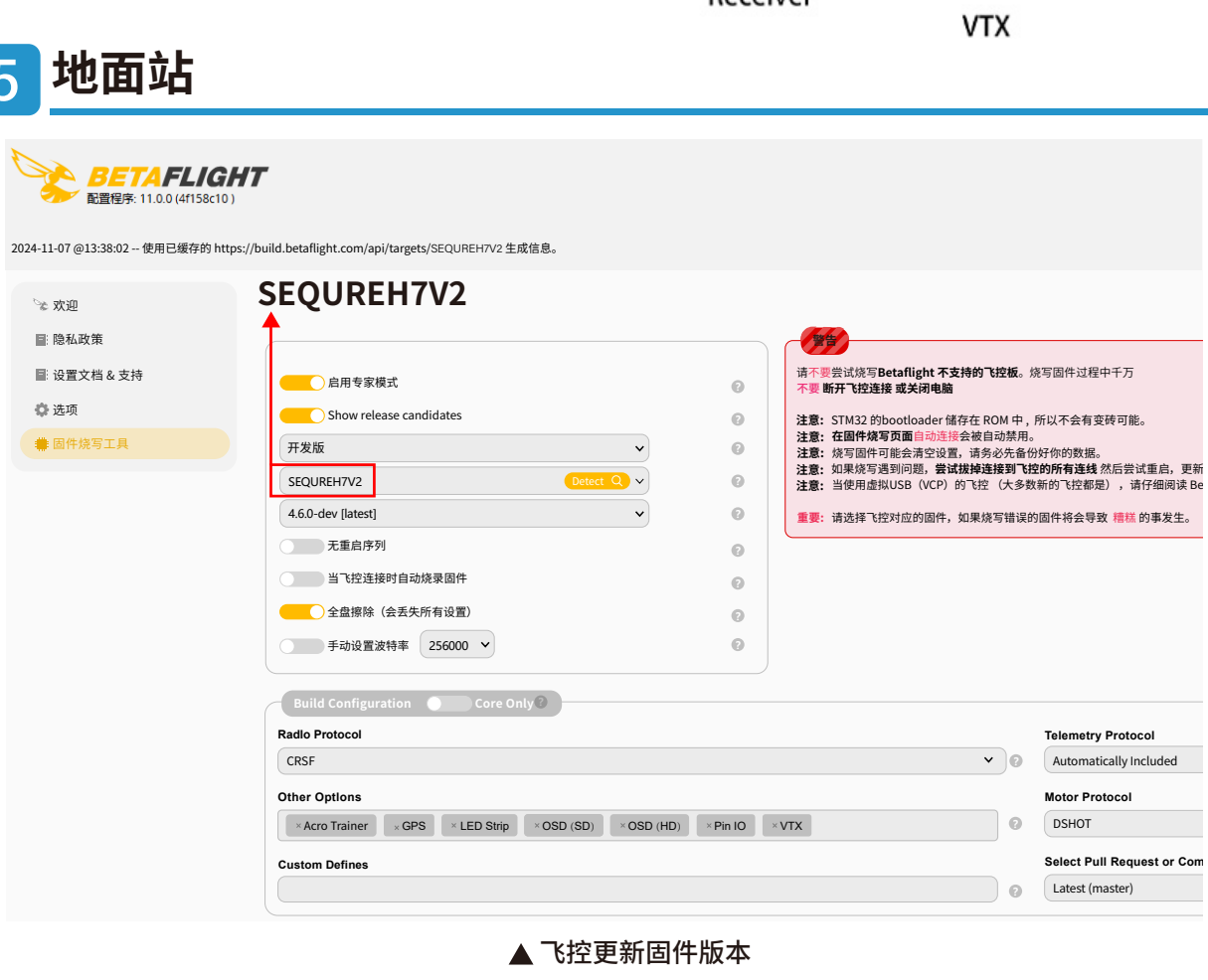

▲ 飞控更新固件版本

固件在4.60及以上的版本，调参需要使用网页版BF。Website: https://app.betaflight.com/

6 保修条款

(1)自购机之日起3个月内出现非人为因素造成的性能故障，厂家提供免费修理服务。3个月后，修理不收取人工费，若更换配件，费用需用户承担。
(2)一切人为损坏，自行拆机，使用不当造成的故障，不在保修范围。

7 安全须知 ⚠

- 请勿刷写非官方指定的固件，以免损坏电调。
- 请不要超过ESC工作电压，电流范围使用。
- 请供电前检查并确保正负极性无误，才能通电使用。
- 请在符合当地法规和确保安全情况下使用产品。
- 请使用符合安全标准的配件，存放在儿童不容易接触的地方。

www.sequremall.com
info@sequremall.com
0769-89399884