axldrone
your world from above

200A Power Distribution Board (PDB)

User Manual

V1.0 | 25.02

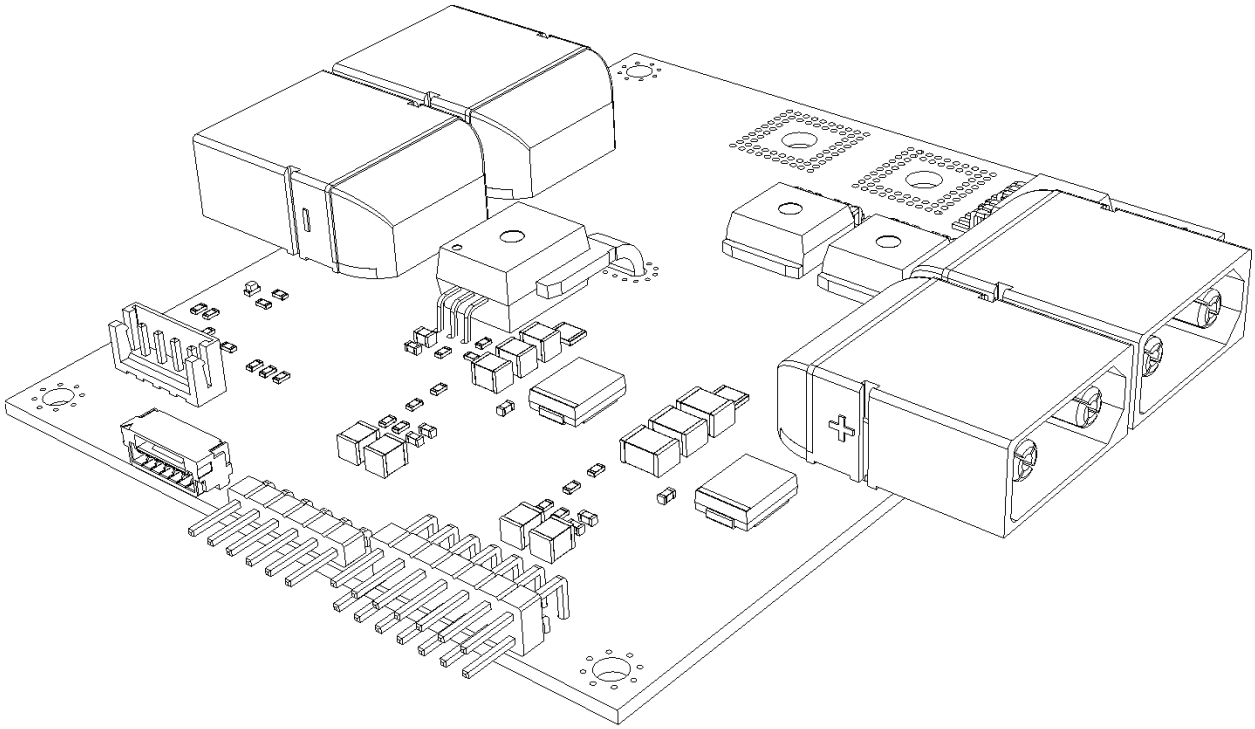

This document is the intellectual property of axldrone India Pvt. Ltd. and is protected under applicable copyright laws. Unless expressly authorized by axldrone, you may not reproduce, distribute, transmit, or sell this document or any portion of its contents in any form.

This document is intended solely for the purpose of guiding users in the proper operation of axldrone products. It must not be used for any other purposes, commercial or otherwise, without prior written consent from axldrone India Pvt. Ltd.

Table of Contents

Introduction 1
Overview 1
What's in the Box 2
Knowing your PDB 200A 2
Key Features & Applications 4
Technical Specifications 5
Installation Guide 6
Safety Instructions 6
Usage & Testing 7
Troubleshooting 7

Introduction

Overview

The PDB 200A is a high-efficiency Power Distribution Board engineered to support advanced drone systems and other high-performance electronic applications. Designed for durability and performance, it can handle continuous current loads of up to 200A, making it ideal for heavy-lift UAVs, robotics, and custom-built vehicles requiring stable and efficient power management.

This board provides clean and organized power distribution to critical components such as ESCs, flight controllers, and peripheral systems, ensuring minimal voltage drops and maximum operational reliability. Its compact layout and high-current traces allow for streamlined integration into tight builds while maintaining thermal and electrical stability under demanding conditions.

In addition to power distribution, the PDB 200A is equipped with analog output ports for battery voltage and current sensing. These outputs can be connected to flight controllers or monitoring systems to enable real-time telemetry, power usage analysis, and intelligent system diagnostics. This feature enhances situational awareness and helps prevent power-related failures during mission-critical operations.

This manual provides detailed guidance on installation, connection configurations, safety precautions, and operational parameters to help ensure optimal performance and longevity of your power system.

axldrone– Proprietary and Confidential

What's in the Box

- Power Distribution Board 200A
- User Manual
- Capacitor 220 uF 100V

Knowing your PDB 200A

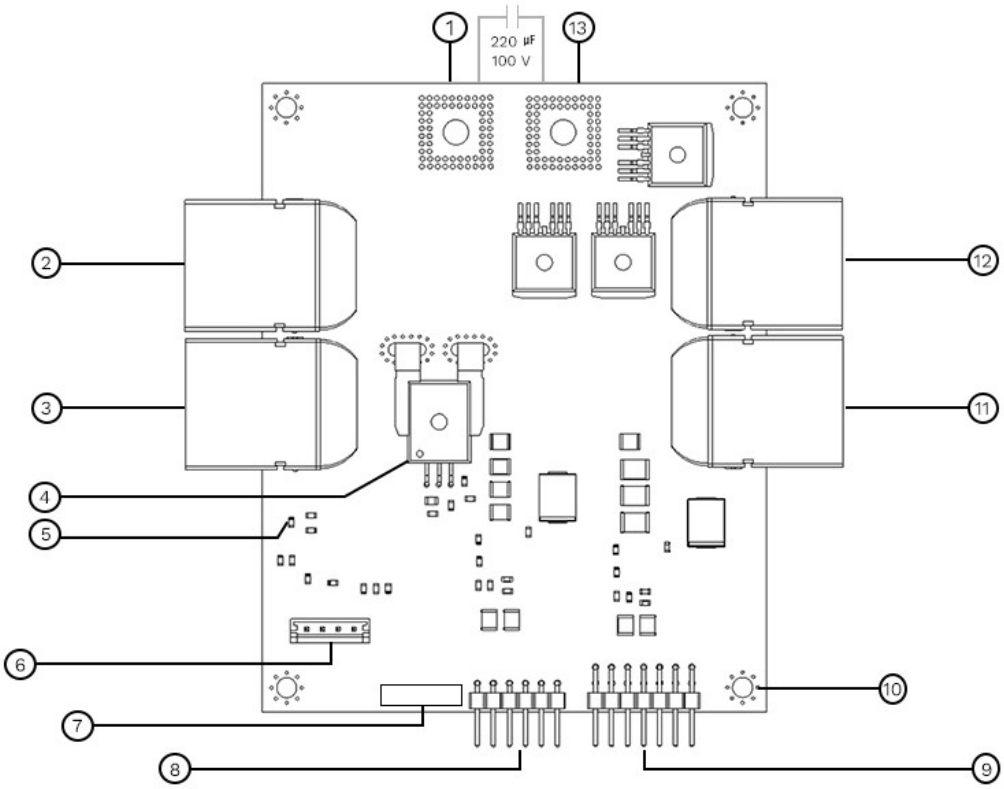

1 Battery +ve
2 XT90 ESC3
3 XT90 ESC4
4 Current sensor
5 Power LED
6 JST 4 Pin Connector
7 JST 6 Pin Connector
8 Single Row Male Header Pin
9 Double Row Male Header Pin
10 Mounting Hole
11 XT90 ESC 1
12 XT90 ESC 2
13 Battery -Ve

axldrone– Proprietary and Confidential

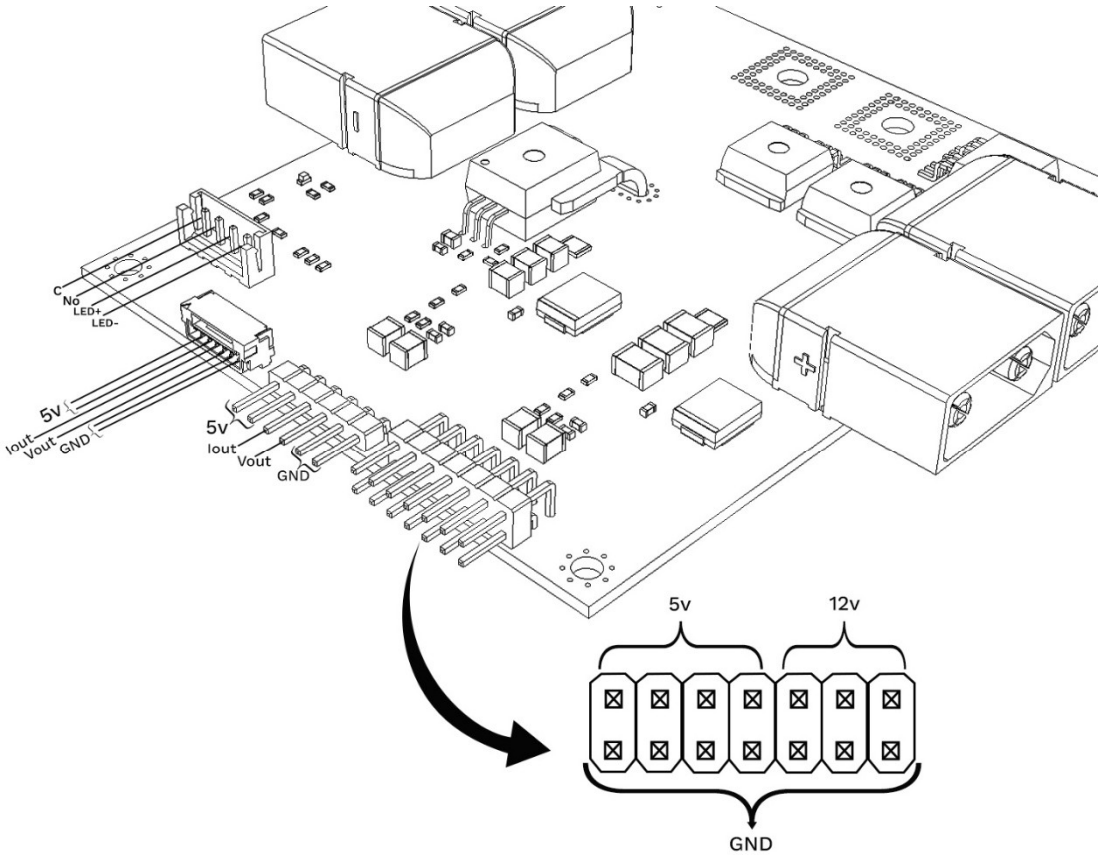

1. Battery Input

- Voltage range: 20 V to 60 V (14S max)
- Recommended 220 µF / 100 V capacitor across battery input to suppress voltage spikes and prevent sparking

2. ESC Power Outputs

- Four high-current XT90 connectors to supply power to ESCs.

3. Anti-Spark Switch Interface

- Pins labeled NO (Normally Open) and C (Common) for connecting an anti-spark relay or switch
- LED+ and LED– pins allow integration of power-on indicator LEDs
- If not using the switch, short the C and NO pins.

4. Regulated Output Rails & Telemetry

- Built-in DC–DC converters provide 12 V at 5 A and 5 V at 5 A for peripheral electronics
- Header pins include four 5 V outputs, one I (Current sensor output), one V (Voltage

axldrone– Proprietary and Confidential

sensor output), and multiple ground pins, which can be used for power supply telemetry.

5. Companion Board Connector

- Multi-pin connector delivers regulated 5 V and telemetry lines to flight controllers such as Cube or Pixhawk

6. Current Sensor

- Hall-effect sensor supports up to 200 A continuous current measurement outputs analog signal for system current input.

7. Power Electronics & Efficiency

- Uses MOSFETs, inductors, and capacitors to route battery power efficiently
- Efficient and reliable buck regulators offering approximately 82% conversion efficiency

8. Physical Dimensions & Weight

- 105 × 105 × 12 mm
- Weight ~90 g

9. Maximum Current Handling

- 200A variant rated for up to 200 A continuous at 60 V input

Key Features & Applications

- Capable of handling high current (up to 200A).
- Anti spark soft switching for inductive loads.
- Input voltage up to 20-60V (14S).
- 4x XT90 connectors 50A each for ESC with Motor.
- Analog battery voltage and current sensors output for Flight controllers and Robotic applications.
- DC - DC converter from 20-60 V input (up to 14S battery) to 5V 5A output.
- DC - DC converter from 20-60V input (up to 14S battery) to 12V 5A output.
- 5V and 12V power output terminals (standard 2.54mm/0.1" header connectors).
- Power output for the flight controller via JST connectors (example Pixhawk, Orange cube).

axldrone– Proprietary and Confidential

Technical Specifications

Parameter	Value
Maximum Continuous Current	200 Amps
Input Voltage Range	20V – 60V DC (14S)
5V Regulated Output	5V DC @ 5A
12V Regulated Output	12V DC @ 5A
ESC/Motor Connectors	4 × XT90 connectors (rated 50A each)
Flight Controller Output	Dedicated regulated output (Pixhawk, Cube etc.)
Analog Current Sensor	Up to 200A
Analog Voltage Sensor	Up to 60V
Output Headers	Standard 2.54mm (0.1″) pitch
Board Dimensions	105 mm × 105 mm × 12 mm
Weight	Approx. 90 grams

axldrone– Proprietary and Confidential

Installation Guide

- Input Power: Solder battery leads to input pads with a parallel 220 µF 100V Capacitor.
- ESC Connections: Connect each ESC connectors (XT90M) to the ESC Connector (XT90F)
- Connect 4 pin JST connector to switch (with in-built LED)
- Connect 6 pin JST connector power output to Flight controller
- BEC Outputs: Use the regulated 5V or 12V outputs to power cameras, air units, and other on-board peripherals.

  Note: Check polarity before soldering. Incorrect wiring can cause permanent damage.
- Do not switch OFF or ON the Anti-spark switch when load is connected to the PDB. It is safe to turn on the switch before adding load.
- If not using the switch, short the C and NO pins.

Safety Instructions

- Always disconnect the battery before handling the PDB.
- Do not exceed the rated voltage/current limits.
- Ensure all solder joints are clean and secure.
- Avoid contact with conductive materials when powered.
- Capacitor required at battery input to avoid anti-spark relay damage.
- Calibrate Iout and Vout in QGroundControl using measured values for accurate telemetry

Calibration values:

Voltage multiplier: 16.148

Amps per volt: 50.613 A/V

Amps Offset: 0.490

axldrone– Proprietary and Confidential

Usage & Testing

- After installation, double-check all connections.
- Use a multimeter to verify voltage at each output.
- Power the unit briefly to check for heat, sparks, or unusual smell.
- Proceed with connecting other electronics once validated.

Troubleshooting

Issue	Possible Cause	Solution
No power output	Loose connection or cold solder	Recheck and re-solder as needed
Overheating	Excessive load or short circuit	Verify current draw and inspect wiring
One output not working	Damaged trace or component	Inspect visually, consider replacing PDB
BEC output not functional	Wrong polarity or overvoltage	Ensure correct wiring and voltage

axldrone– Proprietary and Confidential

Visit Our website

Feel free to connect

Kakkanad, Ernakulam,
Kerala, India – 682030
P : +91 484 299 3399,
+91 949 771 7654
E : info@axldrone.com

C5 UL Cyber Park,
Special Economic Zone
Calicut, India – 673016
P : +91 9645 426 414
E : info@axldrone.com

1441 Broadway,
#5, New York, NY 10018
P : +(646) 260-6311
E : info@axldrone.com

axldrone– Proprietary and Confidential