SKYZONE

# User Manual
# COBRA X

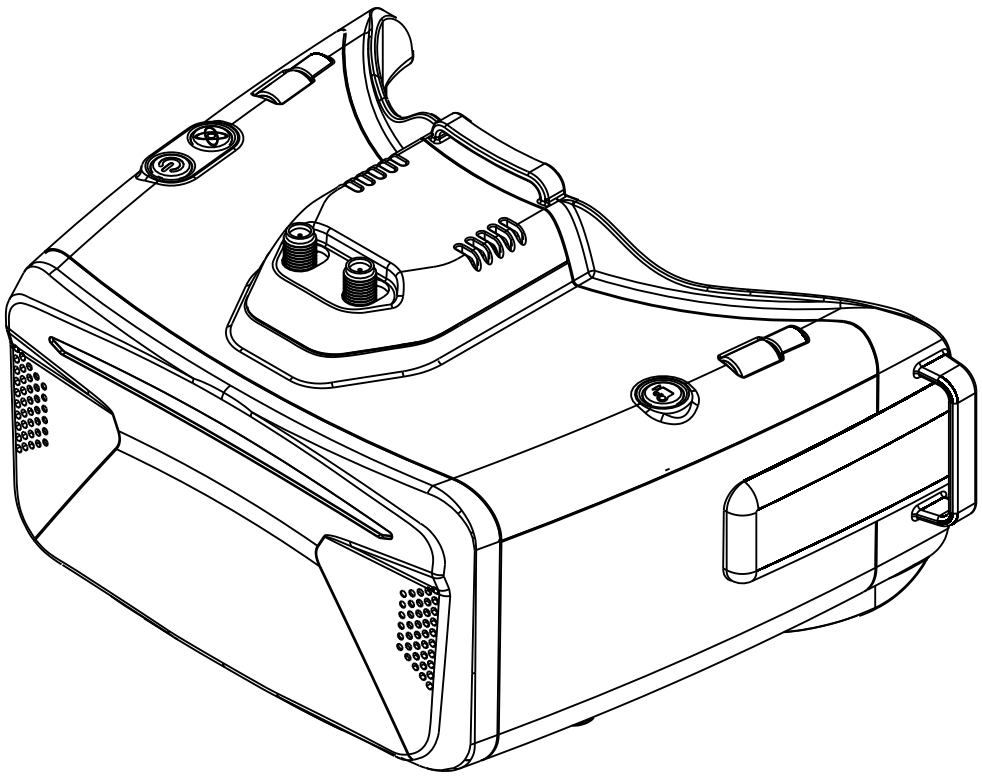

V1.3 202011

# Specifications

| Model | Cobra X |
|---|---|
| Screen | LCD |
| Resolution | 1280X720 |
| FOV(Diagonal) | 50° |
| Aspect Ratio | 4:3/16:9 |
| Receiver | 5.8Ghz 48 CH SteadyView Receiver |
| Language | 10 Language |
| Power Supply | 1Cell 18650/DC 6.5-25.2V/USB 5V |
| Power Consumption | 12V 0.63A 5V 1.5A |
| DVR | H264, 30fps,MOV 6Mbps, SD up to 128Gb |
| Head Tracker | 3-axis Accelerometer, 3-axis gyroscope |
| Dimentions | 122*165*100mm |
| Weight | 332g |

# BAND/CHANNEL table

| BAND/CH table | | | | | | | | |
|---|---|---|---|---|---|---|---|---|
| BAND/CH | CH 1 | CH2 | CH3 | CH4 | CH5 | CH6 | CH7 | CH8 |
| A | 5865M | 5845M | 5825M | 5805M | 5785M | 5765M | 5745M | 5725M |
| B | 5733M | 5752M | 5771M | 5790M | 5809M | 5828M | 5847M | 5866M |
| E | 5705M | 5685M | 5665M | 5645M | 5885M | 5905M | 5925M | 5945M |
| F | 5740M | 5760M | 5780M | 5800M | 5820M | 5840M | 5860M | 5880M |
| R | 5658M | 5695M | 5732M | 5769M | 5806M | 5843M | 5880M | 5917M |
| L | 5362M | 5399M | 5436M | 5473M | 5510M | 5547M | 5584M | 5621M |
| Sensitivity | | –98dBm±1dBm | | | | | | |
| Antenna port | | 2 X SMA–K,50ohm | | | | | | |

# Package Included

1. Goggles*1
2. Receiver Module*1
3. Head Strap *1
4. Power cable*1
5. Headtracker cable*1
6. 5.8GHz 2dD antennas*2
7. Video/Audio Cable*1
8. USB–C Cable*1
9. User Manual*1

# Diagram

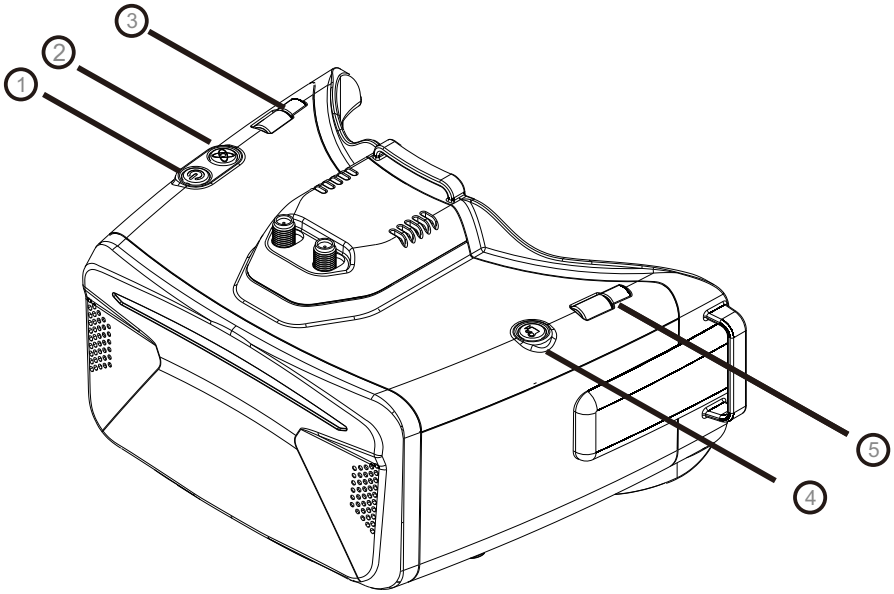


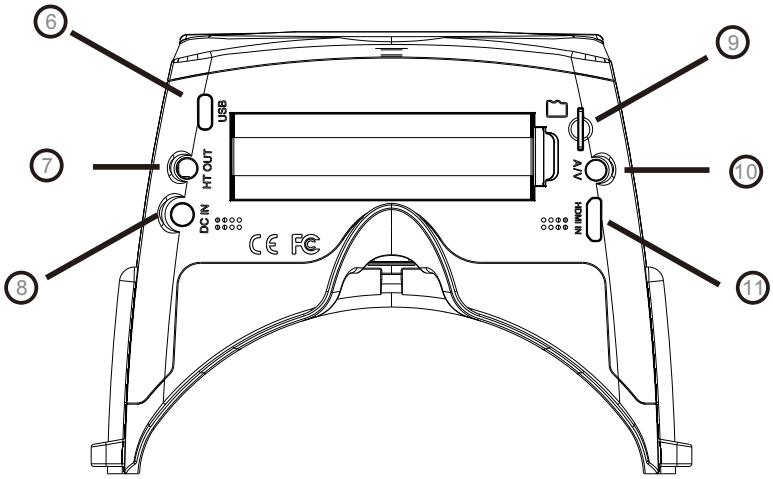


1.Power/Fan
2.System Menu/Headtracker reset
3.CH/BAND/Search
4.Record/Delete
5.Mode
6.USB C port
7.3.5mm Head tracker port
8.DC PORT(5.5*2.1mm)
9.SD card slot
10.AV IN/OUTPUT
11.HDMI input

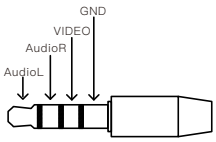


AV Jack Pin-out

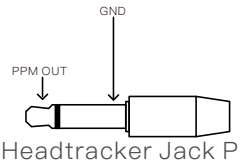


Headtracker Jack Pin-out

# Introduction

The SKYZONE Cobra X is a FPV goggle with 1280*720 high resolution LCD screen , the screen have vivid color and high luminance , pilot can see more details in the racing . With SteadyView receiver , the receiver merge two signal to one,  avoid image tearing and rolling when signal is weak, make image more stable and clear in challenging condition. The goggle support pilot wear glass while fling. The new OS with 10 languages to set select, pilot have no trouble with the menu system, with shuttle wheel and new user interface, pilot can set all the setting just by rolling the wheel without taking off the goggle. the goggles can power by 1 cell 18650 battery or 2~6s lipo battery, the USB charging and DC charging make goggle simple to use in the filed.

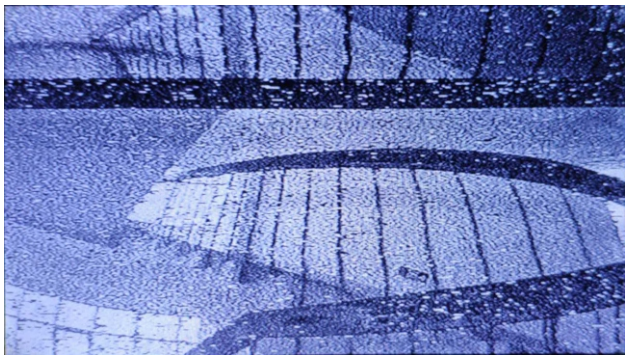

Diversity

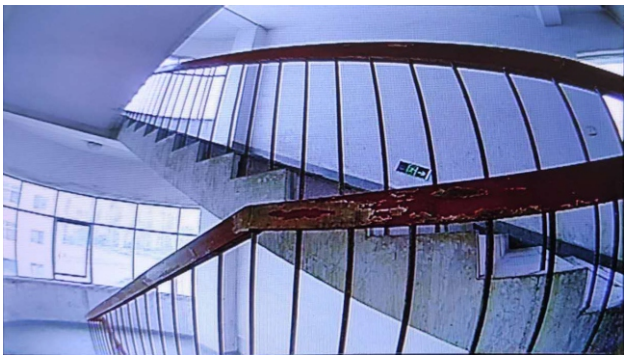

SteadyView

⚠ DO NOT EXPOSE THE LENS DIRECT TO SUNLIGHT, OTHERWISE THE SCREEN WILL BURN IN.

## Quick Start Guide

1.Install the receiver and antenna.
2.Plug the battery into battery bay or use power cable to connect battery to the goggle, Goggle can power by 2~6cells lipo battery, hold the power button to turn on.

## Band and Chanel setting

1.Press the right wheel, then roll right wheel to change channel, press the wheel again switch to Band setting mode, then roll the wheel to change the Band.
2.No wheel operation for 3 seconds, RF setting will back to the channel setting mode.
3.Hold the right wheel to pop up search menu, press the right wheel to start auto search, after searching all the frequency, receiver will work on the strongest signal. roll the right wheel to manually select the channels, short press the right wheel to quit search.

! Sometime the auto search channel is not accurate, user may need manually select the channel.

## MODE MENU

- Short press the left wheel to pop up mode menu.
- RF normal: this mode is normal 48 CH receive mode.
- RF Racing: this mode will make receiver only working on RaceBand.
- RF Third–Party: in this mode, the goggles button cant control the external receiver, also the OSD of the goggles cant read the band/channel of the receiver, third party receiver must plug into left moduel bay.
- AVIN: when enable the AV IN mode . The NTSC and PAL system format can be supported to be automatically switched. The receiver module will be automatically turned off to save the power.
- HDMI IN : the receiver module and the video recording module will be automatically turned off to save the power.
- It is recognized that the screen and the corresponding resolution information will be automatically displayed in the supported resolution format.
- Playback: in this mode, customer can review the DVR files.

## SYSTEM MENU

- Short press right button to pop up or quit system menu.
- Roll right shuttle wheel to navigate, press the wheel into the sub menu.
- In image setting menu, customer have standard, bright, vivid, soft and 3 customized files to select, customer can adjust Brightness, Contrast, Saturation, Hue and Sharpness to suit different environment.
- System language can select: English,French, German, Russian, Italian, Portuguese, Spanish, Chinese, Japanese, Korean.
- In power supply menu, user can choose battery type(2S~6S) to make sure goggles shown real capacity of the battery.
- Voltage calibration gives user ±0.9V range to adjust the voltage, when calibrate the voltage, use multimeter to measure the loaded voltage of the battery, then use shuttle wheel to adjust voltage on OSD to match the real voltage.
- Factory Reset : user can reset all the function and setting in this menu.
- DVR FW upgrade:user can upgrade DVR Firmware from SD card in this menu.
- Firmware version :Goggles Firmware , DVR Firmware version and Serial Number will shown in this menu.

! The function of the wheel and buttons can be swapped from left side to the right side , makes to adapt left handed user. when rotary switch is enabled, all the function in manual is changed from left to right.

## DVR

- Left button is recording button and stop button.
- Build in DVR H264 encoding, SD card recommend Class10, SD card can support up to 128GB.
- SD card must be formatted into FAT32 , user can get into system menu to select the Format SD .
- The video recording function can be used in both the RF Mode and the AV IN Mode.
- By default, when recording the video (including: recording the sound), the "sound recording" function can be turned off in the system menu, but the video signal can be recorded only.
- Automatic recording: enable this function , if the video signal has been detected, the recording function will be activated automatically. The recording function can also manually be stopped by press the REC button.
- Cyclic recording： Overwriting of older recordings on or off (in case of storage space is wasted).
- The video recording file will be automatically divided into the multiple files. In the menu system, the video length can be set as: 5 minutes, 10 minutes, 20 minutes and 30 minutes. The default video length can be set as 30 minutes / each file.
- If the power has been suddenly disconnected in the video recording process, the DVR will be damaged. The goggles have repairing function. After entering into the playback mode, the last DVR will be automatically checked. If it is damaged, the DVR will be automatically repaired.

## PLAYBACK

- In playback mode, roll right wheel to choose the DVR, short press right wheel to play and pause.
- Left wheel to adjust the volume.
- When playing the DVR, roll the right wheel to Fast Forward or Fast backward.
- Press the Right button to quit DVR .
- Press the Left button to delete DVR.

## DISPLAY

- In Display setting menu, customer can change the aspect ratio(4:3 or 16:9), default is 4:3.
- In Display menu, customer can set the RSSI icon: icon + percentage, Icon, Percentage, disable, also adjust the vertical position of the RSSI.
- The luminance of the screen and be adjust in the menu (3 stage, default is 2).Normally do not set the brightness too high unless the image is dim.

## Image Mode

- In image setting menu, customer have standard, bright, vivid, soft and 3 customized files to adjust.
- Customer can adjust Brightness, Contrast, Saturation, Hue and Sharpness to suit different environment in 3 user 1/2/3, the image setting can not change in 4 Pre-set files.

## Head Tracking

- The head tracking button is on the right side of the goggles.
- The gyro required for an initialization time. When it is powered on, goggles must be kept horizontal and stable as long as possible. When hearing the sound of a "beep", the initialization is done.
- Hold HT button to reset the PPM signal to the center, goggles will beep when press the button.

! Disable the Headracker can save the gyro initialization time to speed up goggles boot time.

## FAN

- The built-in fan can not only be mainly used for defogging, but also can be used to dissipate the heat within the product. The speed can be set in the system menu.
- Press the POWER button to start up/stop the fan for defogging.
- User can manually set fan speed to adjust the fan noise.

! The fan will auto turn on when the temperature over a certain point.

## Firmware Update

### Goggles

1,Connect goggles to the computer.

2,Hold the left wheel when turn on the goggles, the usb cable will power the goggles, release the left button, computer will automatically install the driver , computer will show a new removable storage .

3, Copy the Firmware File to folder(Not the SD card). goggles will installing the update at the same time.

! Even enabled the rotary switch function, the boot button is still left button. when the copy process is done, the firmware upgrade is done.

### DVR

1,Take a SD card and format the card to FAT32.
2,Copy the DVR Firmware to the SD card , insert it in the goggles and turn it on.
3,Go to the system menu and choose DVR FM upgrade.

### Receiver Firmware

1, Take the receiver out, hold the boot button when connect the receiver to the computer.
2,Computer will automatically install the driver , computer will show a new removable storage .
3, Copy the Firmware File to the folder(Not the SD card). goggles will installing the update at the same time.when the copy process is done, the firmware upgrade is done.

## Charging

- The goggles integrated with charging module, user can choose USB charge or use barrel connector charge.
- when goggles is powered via barrel connector , the external power is also charging the internal 18650 battery.
- DC and Type C can both charge the internal 18650 battery.
- For safety, do not charge the battery unattended .
- The 18650 battery bay have protection circuit, if remove the battery without turn off the goggle, the battery will in protection status, to quit protection, the goggle need use DC cable or USB cable to charge the battery to quit this mode.

This content is subject to change, download latest version from:

www.skyzonehobbies.com