RADIOMASTER

GX12

Quick start guide

WWW.RADIOMASTERRC.COM

Introduction

Welcome to the RadioMaster GX12 Dual-Band Remote Control System!

Thank you for choosing the RadioMaster GX12, a versatile remote control system featuring dual-band capabilities with 2.4GHz, 900MHz, and Gemini-Xrossband technology. Whether you're a beginner or a seasoned professional, the GX12 is designed to meet your needs, offering precision, flexibility, and reliability.

Please read this guide carefully before operating your new remote to ensure safe and optimal use. We may release updated versions of this manual as we continually enhance our software and hardware. For the latest information and resources, please visit our website.

The GX12 is compatible with many applications, including fixed-wing aircraft, gliders, helicopters, cars, boats, robotics, multi-rotor aircraft, and more. If you can build it, the GX12 can control it! Powered by the robust EdgeTX platform, the GX12 is equipped for seamless integration with your projects.

Follow the links below for more detailed guides, firmware updates, and additional resources.

— The RadioMaster Team

Safety Information

Many remote-control models feature powerful motors and sharp propellers. Please always be careful when using or maintaining these models. Before assembling or performing maintenance, disconnect the power and remove the propellers to ensure your safety.

Do not operate the GX12 remote control system under the following conditions:

- During severe weather or strong winds, including rain, hail, snow, storms, or in areas with electromagnetic interference.
- In situations with limited visibility.
- Near people, property, high-voltage power lines, public roads, vehicles, or animals.
- If you feel tired, unwell, or under the influence of drugs or alcohol.
- If the remote control or model appears damaged or is not functioning correctly.
- In areas with high levels of 2.4GHz or 900MHz interference or where these frequencies areprohibited.
- When the battery voltage of the radio is too low for safe operation.
- In regions where local regulations restrict the use of aviation models. Manual and firmware download

Manual and firmware download

The GX12 comes pre-installed with a factory-tested and approved version of EdgeTX and ExpressLRS firmware. Please update the firmware only if you are confident in the process, as incorrect updates may render the remote inoperable.

For factory release firmware versions, visit the RadioMaster website: https://www.radiomasterrc.com. For future updates and the latest firmware, check the EdgeTX website: https://edgetx.org/ and the ExpressLRS website: https://www.expresslrs.org/.

Remote control overview

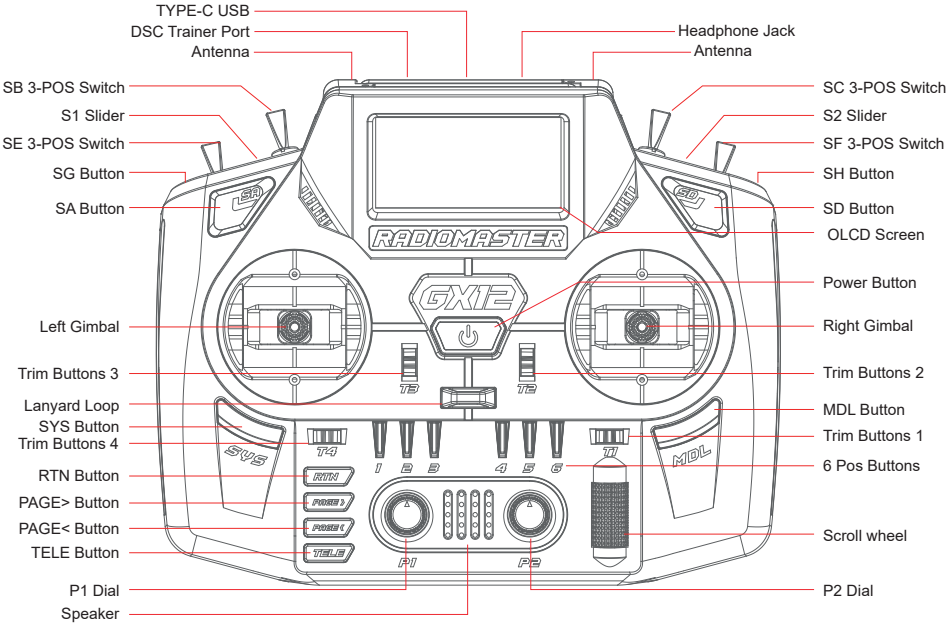

Batteries and charging

Battery and Charging Information for the GX12

The GX12 has a built-in USB-C smart balance charging function designed specifically with 3.7V lithium batteries.

It supports:

- 2x 3.7V Li-ion 18650 batteries or 2x 3.7V Li-Poly batteries (2S 7.4V LiPo battery pack).
- The nominal voltage for each cell is 3.7V, with a fully charged voltage of 4.2V per cell.

Important Charging Guidelines:

- Do Not Use LiFe battery packs or 18650 Li-ion batteries with a nominal voltage of 3.6V and a fully charged voltage of 4.1V. Using incorrect batteries may damage the charger or pose a fire hazard.
- Ensure Non-Protected Li-ion Batteries: If using Li-ion batteries, ensure they are non□protected.
- Regularly check the voltage and condition of your batteries.
- Never Charge Unattended: Always charge in a safe environment, away from flammable materials.
- Avoid Charging if the Remote is Wet or Damaged: Only charge when the device works properly.
- Polarity Matters: Do not charge with reversed polarity, which can cause severe damage.

Disclaimer: RadioMaster is not responsible for any damages or consequences resulting from the improper use or misuse of this product.

Exterior adjustable

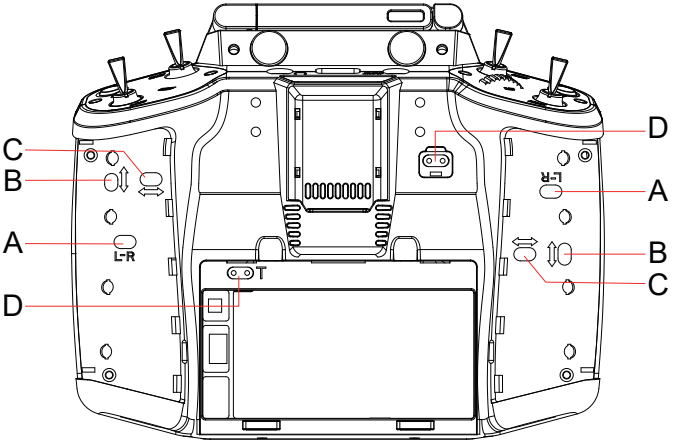

A: L-R Mode-1 and Mode-2:
Turn clockwise to disable self-centering (Throttle) / Turn counterclockwise to enable self-centering (Elevator)

B: Up-Down tensions adjustment:
Turn clockwise to increase vertical stick tension / Turn counterclockwise to decrease tension

C: Left-Right tension adjustment:
Turn clockwise to increase horizontal stick tension / Turn counterclockwise to decrease tension

D: Throttle stick tension adjustment:
Turn clockwise to increase throttle stick tension / Turn counterclockwise to decrease tension

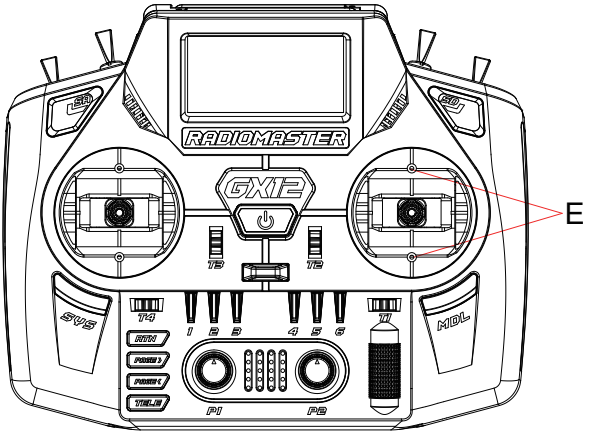

E: Upper and lower Angle travel (38-60 degrees) :
Adjust the screw clockwise, and the Angle becomes smaller.
Adjust the screw counterclockwise to increase the Angle.

Model and Protocol Selection

The GX12 is equipped with a built-in dual-band, dual-frequency ExpressLRS RF module, offering compatibility with a wide range of receivers:
• 2.4GHz receivers
• Sub-GHz (900MHz) receivers
• Gemini-Xross dual-band receivers

Packet Rate Selection:
To select the appropriate Packet Rate on your GX12 remote control, follow these options based on the receiver type:
• 50Hz-500Hz 2.4G: For binding with any ELRS 2.4GHz receiver.
• 50Hz-200Hz Low Band: This is for binding with any ELRS Sub-GHz (900MHz) receiver.
• X100 and X150: For use with Gemini Xross dual-band receivers.
• DK250/DK500/K1000: These are new FSK high-speed modes for LR1121-based receivers.
For a detailed receiver compatibility chart, visit the RadioMaster manuals page.

Binding Instructions for ExpressLRS
Follow these steps to bind your GX12 with an ExpressLRS receiver:
1. Turn off the transmitter.
2. Cycle power to the receiver three times. The receiver LED should flash twice, indicating bind mode.
3. Turn on the transmitter, long-press the SYS button, and navigate to the ExpressLRS LUA under the TOOLS menu.
4. Scroll down to [Bind] and press enter.
5. The LED on the receiver will turn solid, indicating a successful bind.

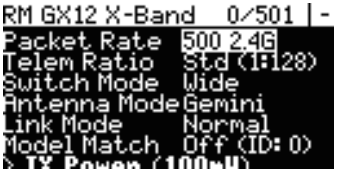

Notes

The GX12 runs on the powerful EdgeTX platform, known for its advanced programming, customization, and mixing capabilities. Whether you're a novice or an experienced user, EdgeTX provides a wide range of features to help you customize your remote control experience according to your specific requirements.

To fully explore the potential of EdgeTX, including step-by-step instructions for installation, programming, and advanced functions, please download the comprehensive software installation guide from the links provided below:

EdgeTX Official Site: https://edgetx.org
RadioMaster Support: https://www.radiomasterrc.com

Specifications

Item: GX12 Radio
Size: 183*148*78mm
Weight: 573g
Frequency: 2.400GHz and Sub-G 900MHz
Internal RF: ExpressLRS 2.4GHz / Sub-G 900MHz
Supported protocols: ExpressLRS
Cooling fan: YesAntenna: Dual folding 2.4GHz/ Sub-G 900MHz
Voltage Range: 6.6 - 8.4V DC
Control distance: Max 2km
Current: 390mA - 1000mA, 8.0V(Mode and Power level dependent)
Radio Firmware: EdgeTX (Transmitter) / ExpressLRS (RF module)
Channels: Max 16 channels (Receiver dependent)
Battery: 7.4V 2-cell Lithium-Polymer / Two 3.7V 18650 Lithium-Ion cells (batteries not included)
Charging: 2s Smart Balance Charging
Connectivity: USB-C
Display: 128*64 Monochrome OLED display
Gimbal: GX01 1000Hz, 3D Digital CNC Hall Effect Gimbal with folding sticks
Gimbal sticks: 3mm
External module: Nano / Crossfire compatible
Upgrade Method: USB / EdgeTX Companion PC software
Memory: 512Mb Integrated Flash

Warranty and Repair

If you experience any issues with your GX12 hardware, please retain your proof of purchase for warranty purposes. To initiate a warranty claim or seek repair assistance, follow these steps:
1. Contact Your Retailer: Contact the retailer where you purchased your GX12 for warranty support.
2. Visit Our Warranty Support Page: For additional assistance or to contact our support team, visit RadioMaster Warranty Support: https://www.radiomasterrc.com/contact.
Our team is here to help ensure your GX12 operates at peak performance.

EU Simple Declaration of Conformity

RadioMaster declares the radio equipment GX12 is in compliance with EU directives Directive 2014/53/EU. Full text of the declaration of conformity is available at the following website www.radiomasterrc.com

Manufacturer by

ShenZhen RadioMaster Co., Ltd
4th Floor, Yangtian Building, No. 18 Yangtian Road, Xin'an Street, Baoan District, Shenzhen, Guangdong.

FCC ID: 2BBP3-GX12

FCC Information

This equipment has been tested and found to comply with the limits for Part 15 of the FCC rules. This device complies with part 15 of the FCC rules. Operation is subject to the following two conditions: (1) This device may not cause harmful interference, and (2) this device must accept any interference received, including interference that may cause undesired operation. Full text of the declaration of conformity is available at the following website www.radiomasterrc.com

CAUTION:

Changes or modifications not explicitly approved by the responsible party may void the user's authority to operate this equipment. This product includes a radio transmitter utilizing wireless technology that has been tested and found compliant with the relevant regulations for radio transmitters within the specified frequency range of the original hardware.

Antenna Separation Distance

When using your RadioMaster transmitter, please maintain a minimum distance of 20 cm between your body (excluding fingers, hands, wrists, ankles, and feet) and the antenna to comply with RF exposure safety requirements set by FCC regulations.

简介

感谢您购买RadioMaster GX12 2.4g和SUB-GHz遥控系统。该系统用途广泛，可供初学者和专业人士使用。为了确保正确、安全地使用本产品，请在使用前仔细阅读本使用说明书。由于版本升级，已经进行了更改。本手册中包含的信息如有更改，恕不另行通知。

GX12遥控器适用于所有类型的固定翼、滑翔机、直升机和多旋翼飞机。可以根据使用的航空器选择型号类型，并可以使用各种混合功能。

-RadioMaster 团队敬上

安全须知

许多遥控模型都配备了强大的电机和锋利的螺旋桨。使用模型时，请谨慎行事。进行组装或维护时，请确保已断开模型的电源并卸下螺旋桨。

在以下情况下，请勿操作GX12遥控系统：

- 在恶劣天气或强风条件下，例如雨，冰雹，下雪，暴风雨或电磁环境中。
- 在能见度有限的任何情况下。
- 在可能存在人员、财产、电力高压线、公共道路、有车辆或动物的区域。
- 如果您感到疲倦或不适，或在药物或酒精的影响下。
- 如果遥控器或模型似乎已损坏或无法正常工作。
- 在2.4GHz或SUB-GHz干扰较大的区域或禁止使用2.4GHz或SUB-GHz无线电的地方。
- 当电池电压太低而无法使用时。
- 在当地法规禁止使用航空模型的区域。

说明书和固件下载

GX12 预装标准的EdgeTX固件。要下载最新的软件手册，请访问RadioMaster网站：
https://www.radiomasterrc.com

要为您的GX12遥控器下载最新的固件，请访问EdgeTX网站：https://edgetx.org/

警告！

GX12出厂时预装最稳定的固件。如果您有经验并且有信心更新系统固件，请仅更新固件。不正确的更新可能会导致遥控器无法操作。

遥控器概述

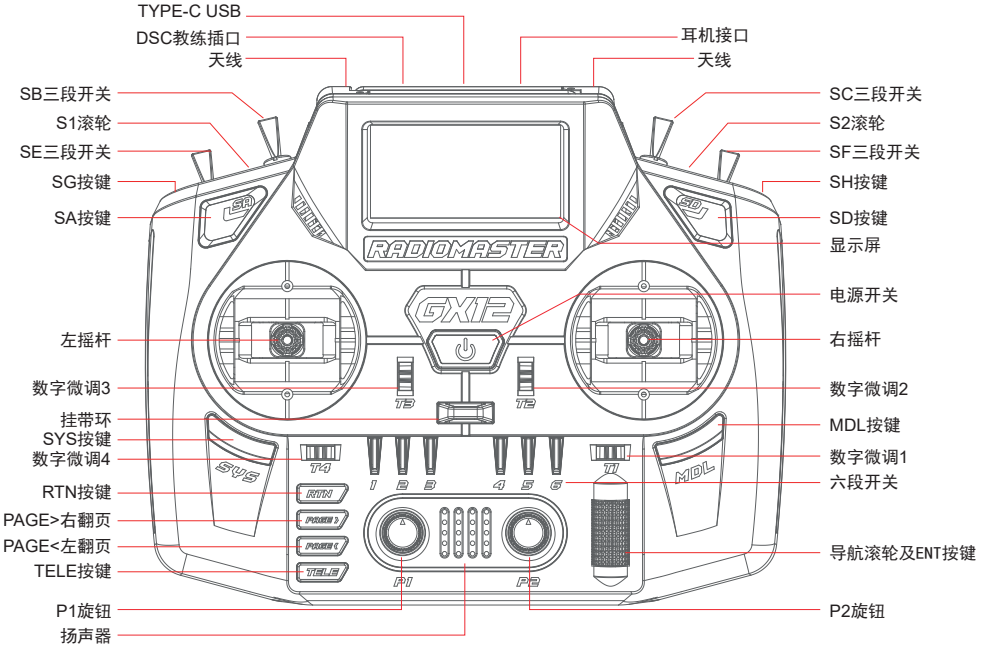

电源和充电注意事项

GX12内置USB-C充电功能，可用于3.7v至4.2v的锂电池。该充电电路仅适用于2x 3.7v锂离子18650电池或2x 3.7v Lipoly电池(2s 7.4v Lipo电池组)，标称电池电压为3.7v，最大充电电压为4.2v。

不要使用标称电压为3.6v至4.1v的寿命电池组或18650锂离子电池。给不正确的电池充电可能会损坏充电器或引起火灾。

请定期检查电池的电压和状态，切勿在无人看管的情况下充电，在远离易燃材料的安全区域充电。如果遥控器被水打湿或损坏了，请勿给它充电。

RadioMaster不承担因使用或误用本产品而造成的任何不良后果。

模型选择及协议选择

GX12内置双路双频ExpressLRS高频模块，可以兼容所有2.4Ghz和SUB-GHz接收机。ExpressLRS开源团队发布了正式固件版本3.5.1，请注意需要把接收机固件都升级到3.5.1，以确保和发射机版本匹配。

在遥控器上打开ExpressLRS选择Packet rate，以下是对应关系：
・50hz-500Hz，为2.4Ghz模式，可以直接对频任何ExpressLRS 2.4Ghz接收机。
・50Hz-200Hz Low Band，为SUB-GHz模式，可以直接对频任何ELRS SUB-GHz接收机。
・X100和X150，是2.4Ghz和SUB-GHz双频同时工作模式，只能对频XrossBand双频接收机。

DK250/DK500/K1000，这是LR1121版本接收机独有的FSK高速率模式，是ExpressLRS 3.5的最新功能，在这里可以查询并了解这个模式：https://github.com/ExpressLRS/ExpressLRS/pull/2832

对频方式
1:关闭发射机
2:对接收机连续通电3次，接收器LED闪烁2次，表示绑定模式。
3:打开遥控器，长按SYS键，在TOOLS菜单下选择ExpressLRS LUA。向下滚动到[Bind]并按确认。
4:接收机上的LED指示灯常亮，表示对频成功。

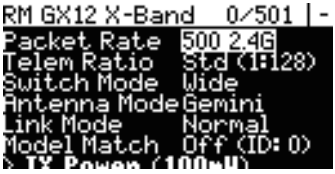

注意

EdgeTX软件非常强大，并且具有大量的编程和混控功能。请从下面的链接下载综合软件安装指南以获取更详细的说明：https://edgetx.org/

技术指标

型号：GX12遥控器
尺寸：183*148*78毫米
重量：573克
频率：2.400GHz / SUB-GHz
内部射频：ExpressLRS 2.4GHz / SUB-GHz
支持的协议：ExpressLRS
含有涡轮风扇：是
天线：双折叠式2.4GHz/ SUB-GHz双频
遥控距离：2千米
电压范围：DC 6.6 - 8.4V
控制距离：最大2km
电流：390mA - 1000mA, 8.0V(取决于无线功率和ExpressLRS的发射模式)
无线电固件：EdgeTX（发射器）/ ExpressLRS（射频模块）
通道： 最多16个通道（取决于接收机）
电池： 7.4V 2芯锂离子聚合物电池 / 2芯 3.7V 18650锂离子电池（不含电池）
充电：智能平衡充电
连接线：USB-C
显示屏：128 * 64黑白OLED显示屏
摇杆： GX01 3D数字化CNC霍尔摇杆（输出速率达1000Hz）
摇杆头：M3
外部模块：可与Nano / Crossfire高频头兼容
升级方法：USB/EdgeTX 配套电脑软件
内存：512Mb 内置闪存
升级方法：支持USB在线升级 / flash离线升级

摇杆调节

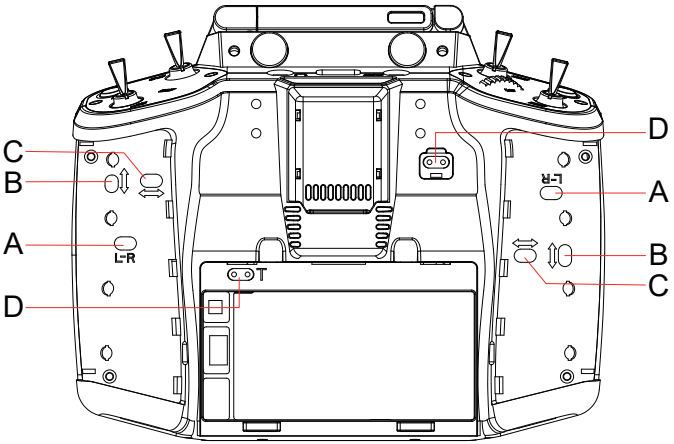

A L-R：左右手互换，顺时针拧螺丝到底，调节成油门模式。逆时针拧螺丝，调节成自回中模式（升降）

B 上下箭头：垂直方向回弹力调节：顺时针加重弹力，逆时针减小弹力；

C 左右箭头：水平方向回弹力调节：：顺时针加重弹力，逆时针减小弹力

D T字：油门杆阻尼调节：顺时针加重阻尼，逆时针减小阻尼

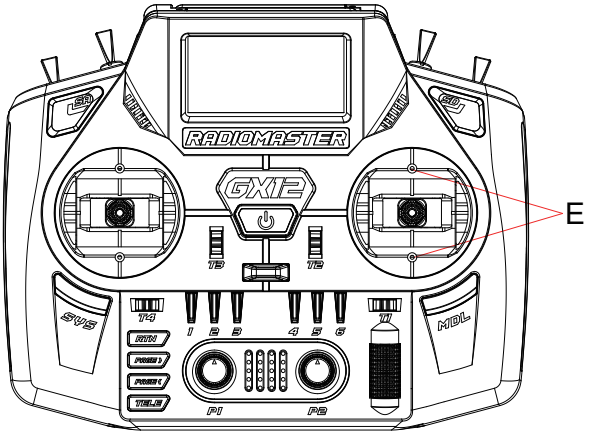

E：上下角度行程（38-60度）：

顺时针调整螺丝，角度变小。

逆时针调整螺丝，角度变大。

保修及维修

如果您的遥控器硬件出现任何问题，请保留购买证明并与您购买GX12的零售商联系。

固件更新和EdgeTX信息

有关EdgeTX开源固件开发团队的最新资讯和固件更新，请访问EdgeTX网站，
网址为：https://edgetx.org/

用户手册

有关GX12 EdgeTX系统固件的详细用户手册，请访问https://edgetx.org/

欧盟认证合格声明

广东省深圳市宝安区新安街道72区杨田路扬田大厦4楼
RadioMaster无线电设备GX12符合欧盟指令2014/53/EU。符合性认证声明的全文可在以下网站上找到：www.radiomasterrc.com
制造商
深圳RadioMaster有限公司

FCC ID: 2BBP3-GX12
FCC 认证信息
T该设备已经过测试，符合FCC规则第15章的规定。操作必须符合以下两个条件：
（1）此设备不会造成有害干扰
（2）此设备必须接受收到的任何干扰，包括可能导致意外操作的干扰。
符合性声明的全文可在以下网站上找到：www.radiomasterrc.com

警告：

未经负责合规方明确批准的更改或修改可能会使用户丧失操作设备的权限。
本产品包含具有天线技术的无线电发射器，该无线电发射器已经过测试，符合适用于2.400GHz至2.4835GHz频率范围内的无线电发射器的适用法规。

安全的天线距离

操作RadioMaster发射器时，请确保您的身体（不包括手指，手，腕，脚踝和脚）与天线之间保持至少20cm的距离，以符合FCC法规确定的RF暴露安全要求。

WWW.RADIOMASTERRC.COM

V1.4