感谢您购买 Radiomaster ER6 ExpressLRS 接收机，ER6接收机基于革命性的 ExpressLRS 系统，高性能、高可靠性、灵活配置、快速响应速度、超远航程，为您的航模爱好带来全新体验。

注意：

1.遥控器端推荐的ELRS LUA设置为：

- 标准舵机设置：

数据包传输速率：	100Hz Full
回传比例：	Std (1:32)（如果不确定则默认）
开关模式：	8ch

- 高性能舵机设置：

数据包传输速率：	333Hz Full
回传比例：	Std (1:128)
开关模式：	8ch

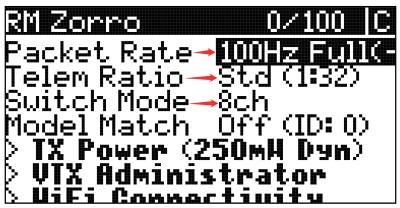

2.EXT-V（外部电压输入）电压回传读数的最大输入电压为 35V。不要超过 35V，否则会损坏接收机。

3.ER6 的 EXT-V（外部电压输入）通过 EXT-V 2针JST-GH 连接器访问。电线必须焊接到电池或电调的正负极线上。如果没有找到 EXT-V 电源，ER6 将默认读取接收器引脚上的电压，任何情况下只能检测一个电池或电源的电压。

4.请确保电调BEC的供电电流与所用舵机的功耗要求相匹配。如果使用高压大扭矩舵机，建议使用2S 7.4V电池直接供电或合适的大电流UBEC。

5.您的遥控器将需要校准回传电压。在遥控器的回传设置页面，找到RxBt传感器。编辑传感器设置并微调偏移量（Offset），直到显示的读数与模型中电池的实际电压相匹配，如果差异较大，则可能还需要调整比例（Ratio）。

***校准的电压与实际测量电池的总电压保持一致即可。**

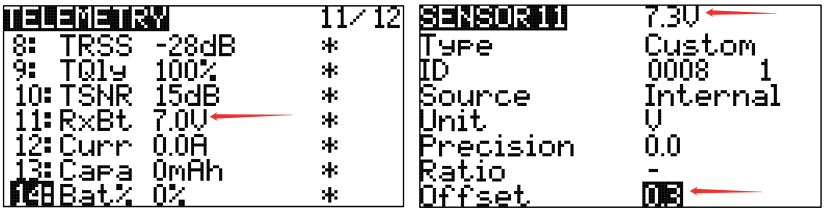

6.ExpressLRS 需要 CH5 来设置遥控器中射频模块的锁定/解锁状态。建议在遥控器上给CH5分配给一个开关，例如油门切断开关，使用 ExpressLRS LUA 或 Wifi WebUI，您可以将不同的通道分配给接收器的 CH5 输出。

请访问https://www.expresslrs.org/以了解更多关于设置解锁开关的重要性。

CH1: CH1
CH2: CH2
CH3: CH3
CH4: CH4
CH5: CH7
CH6: CH6

Radiomaster ER6接收机专为固定翼用户设计。它最多可以驱动 6 个舵机，并具有内置的接收机电压回传和飞机电池电压回传功能，能够自动检测要使用的电压输入。提供了一个 4 线 CRSF 接口，以方便以后扩展传感器。 ER6 具有双天线，回传发射功率高达 100mw，外壳采用一体成型工艺，结构强度较高。

产品特点：

电源：DC 4.5 - 8.4V
天线类型：20cm 高灵敏度双天线
无线协议：预装ExpressLRS 3.3.0
输出通道：6CH PWM
回传功率：最高100mw (可在LUA中调节)
回传电池电压检测范围：DC 4.0 - 35V
总线接口：CRSF
重量：14.5克
尺寸：43*25*15mm

固件选择：

设备类别：Radiomaster 2.4Ghz
设备：Radiomaster ER6

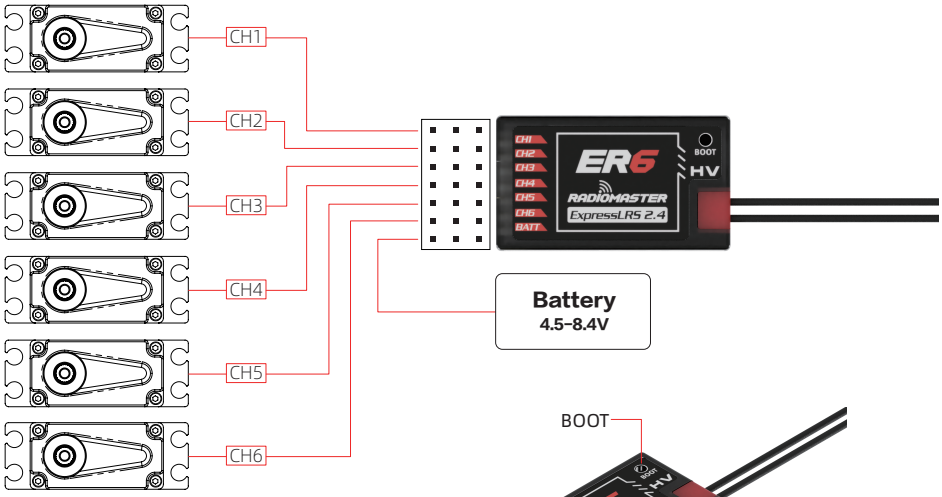

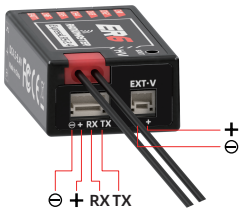

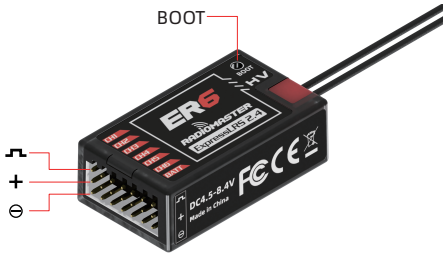

对频方法（传统方式）：

1.当您第一次打开接收机时，接收机LED灯会连续双闪，这表明接收机处于对频模式中。如果不是这样，请按住接收机按钮10秒钟来重置接收机。
2.打开遥控器上的ExpressLRS LUA，选择[BIND]，然后确认。
3.对频成功 指示灯常亮，表示对频成功。

注意： 要第二次对频接收机或对频到另一个无线电，请重新启动接收机 3 次（重复上电三次）。在第三次上电后，接收机LED灯将双闪表示对频模式。如果使用3次上电方法无法成功进入对频模式，可以按住接收机按钮10秒将接收机重置为对频模式，或者使用下面的短语对频方法。
警告：使用重置按钮时，接收机中所有先前的设置都将被删除，需要重新设置。

对频方法（对频短语方式Binding phrase）

1. 打开ExpressLRS LUA脚本并导航到WIFI连接页面。选择启用WIFI选项，并通过手机、平板电脑或个人电脑连接到您的ExpressLRS发射机WIFI（参见下面的TX WIFI说明）。打开WebUI网页（ExpressLRS的默认网页地址为：http://10.0.0.1/），并输入一个独特的属于您自己的对频短语，保存并重新启动。

2. 打开接收机，等待60秒，LED迅速闪烁以指示WIFI模式。将您的手机、平板电脑或个人电脑连接到接收机WIFI（参见下面的TX WIFI说明）。打开WebUI网页（ExpressLRS的默认网页地址为：http://10.0.0.1/），并输入与发射机中一致的对频短语，保存并重新启动。一旦发射机和接收机有相同的对频短语时，它们将自动连接而无需对频。

发射机WIFI：	接收机WIFI：
WIFI默认网络名称：ExprersLRS TX	WIFI默认网络名称：ExprersLRS RX
WIFI默认密码：expresslrs	WIFI默认密码：expresslrs
默认URL：http://10.0.0.1/（在浏览器中打开）	默认URL：http://10.0.0.1/（在浏览器中打开）

Thank you for purchasing the Radiomaster ER6 ELRS receiver. The ER6 receiver is based on the revolutionary ExpressLRS system. It offers high performance, high reliability, flexible configuration, fast response speed and ultra-long range bringing you brand new experience with your hobby.

Important:

1.The recommended ELRS LUA settings on the remote-control end are:

- Standard servos:

Packet Rate:	100Hz Full
Telem Ratio:	Std (1:32) (default if unsure)
Switch Mode:	8ch

- Performance servos:

Packet Rate:	333Hz Full
Telem Ratio:	Std (1:128)
Switch Mode:	8ch

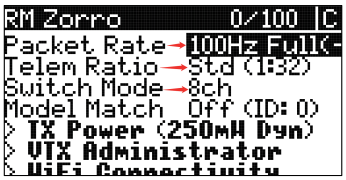

2: The maximum input voltage for the EXT-V (external voltage input) telemetry reading is 35V. Do not exceed 35V or the receiver will be damaged.

3: The EXT-V (external voltage input) of the ER6 is accessed via the EXT-V 2pin JST-GH connector. The RED wire must be soldered to the positive of the battery or ESC. If no EXT-V power source is found, the ER6 will default to reading the voltage on the receiver pins, only one voltage input can be used at the any given time.

4: Please ensure that the power supply current of the ESC BEC matches the power consumption requirements of the servo used. If using high-voltage and high-torque servos, it is recommended to use a 2S 7.4V battery for direct power supply or a suitable high-current UBEC.

5: Calibration of the telemetry voltage will be required on your radio. Navigate to the telemetry page on your radio and locate the RxBt sensor. Edit the sensor settings and adjust the offset until the displayed reading matches the actual voltage of the battery in the model. If there is a large difference, adjustment of the ratio may also be required.

***For best results, calibrate the voltage of your radio using a fully charged battery of the correct cell count intended for use in the model.**

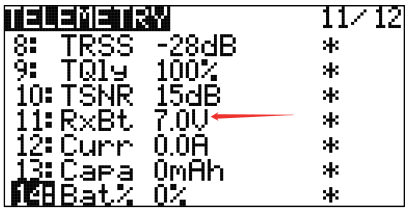

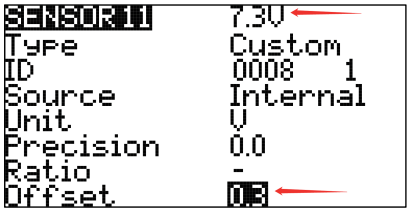

6: ExpressLRS Arming requirements and the use of Channel 5: CH5 is required by ExpressLRS to set the Arm state of the RF module in your radio. It is recommended to assign CH5 to a switch such as your throttle cut switch as this will provide benefits such as dynamic power. Using the ExpressLRS LUA or the Wifi WebUI, you can assign different channels to the CH5 output of your receiver. See example to the right:

CH1: CH1
CH2: CH2
CH3: CH3
CH4: CH4
CH5: CH7
CH6: CH6

Please visit https://www.expresslrs.org/ to learn more on the importance of setting up arming.

Radiomaster ER6 ELRS receiver has been specially designed for fixed-wing users. It can drive up to 6 servos and has built-in receiver voltage telemetry and flight battery telemetry with the ability to automatically detect which voltage input to use. A 4-wire CRSF interface is provided to facilitate later expansion of telemetry sensors. The ER6 features a dual-antenna with telemetry power up to 100mw. The receiver shell adopts one-piece molding process with high structural strength.

Product Features:

Power supply: DC 4.5 - 8.4V
Antenna type: 20cm high sensitivity dual antenna
Wireless protocol: ExpressLRS 3.3.0 pre-installed
Output channel: 6CH PWM
Telemetry power: maximum 100mw (LUA Adjustable)
Telemetry Battery voltage detection range: DC 4.0 - 35V
Bus interface: CRSF
Weight: 14.5 grams
Dimensions: 43*25*15mm

Firmware:

Device Category: Radiomaster 2.4Ghz
Device: Radiomaster ER6

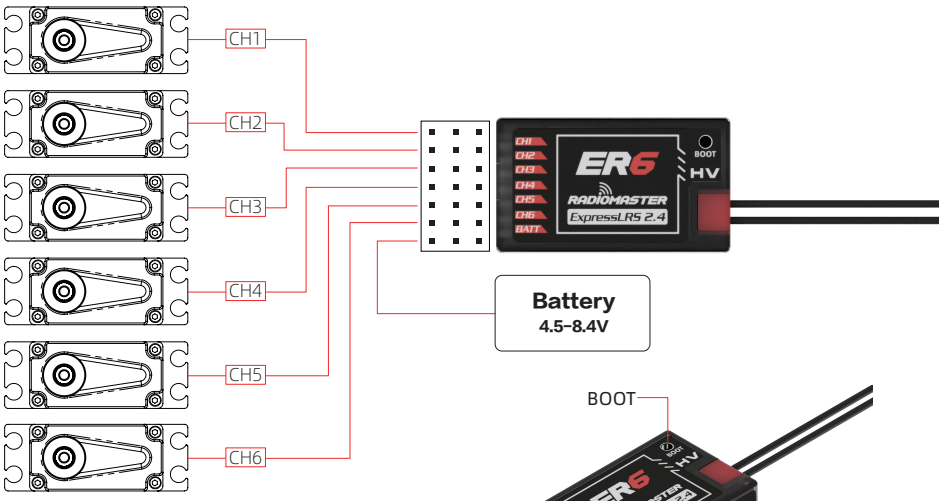

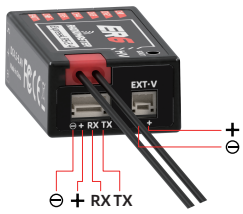

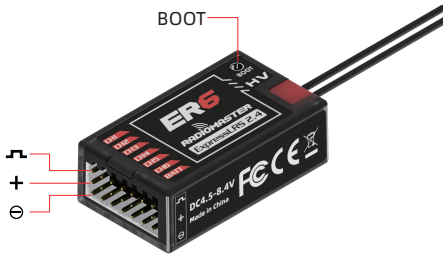

Binding method (Traditional):

1. The first time you power on your receiver, the LED will double blink. This indicates that the receiver is in bind mode. If this is not the case, hold down the boot button for 10 seconds to reset the receiver.
2. Open the ExpressLRS LUA on your remote controller and select [BIND], then confirm.
3. A successful bind is indicated by the light being a steady on, indicating that frequency binding was successful.

Note: To bind the receiver a second time or to another radio, power cycle the receiver 3 times. On the third power cycle, the LED will double blink indicating bind mode. If you cannot successfully enter bind mode with the 3 power cycle method, you can hold down the boot button for 10 seconds to reset the receiver to bind mode or use the passphrase method below.
WARNING: All previous settings in the receiver will be erased and need to be set again when using the reset button.

Binding method (Passphrase).

1. Open the ExpressLRS LUA and navigate to the Wifi Connectivity page. Select the Enable Wifi option and connect to your radios wifi with a mobile phone, tablet or PC (See TX Wifi notes below). Open the WebUI (Express LRS web page on http://10.0.0.1/) and choose a unique bind phrase. Note Bind phrases are not secret and can be read. Save and Reboot.

2. Power up the receiver and wait 60 seconds for the LED to blink rapidly to indicate Wifi mode. Connect your phone, tablet or PC to the receivers Wifi (See TX Wifi notes below). Open the WebUI (Express LRS web page on http://10.0.0.1/) and enter the matching bind phrase previously entered on your radio. Note Bind phrases are not secret and can be read. Save and Reboot. Once a radio and a receiver have the same bind phrase set they will automatically bind.

TX Wifi notes:	RX Wifi notes:
WiFi default network name: ExpressLRS TX	WiFi default network name: ExpressLRS RX
WiFi default password: expresslrs	WiFi default password: expresslrs
Default URL: http://10.0.0.1/ (Open in browser)	Default URL: http://10.0.0.1/ (Open in browser)