Speedy Bee®

TX□□□ USER MANUAL

Simplifying FPV

Instruction Diagram

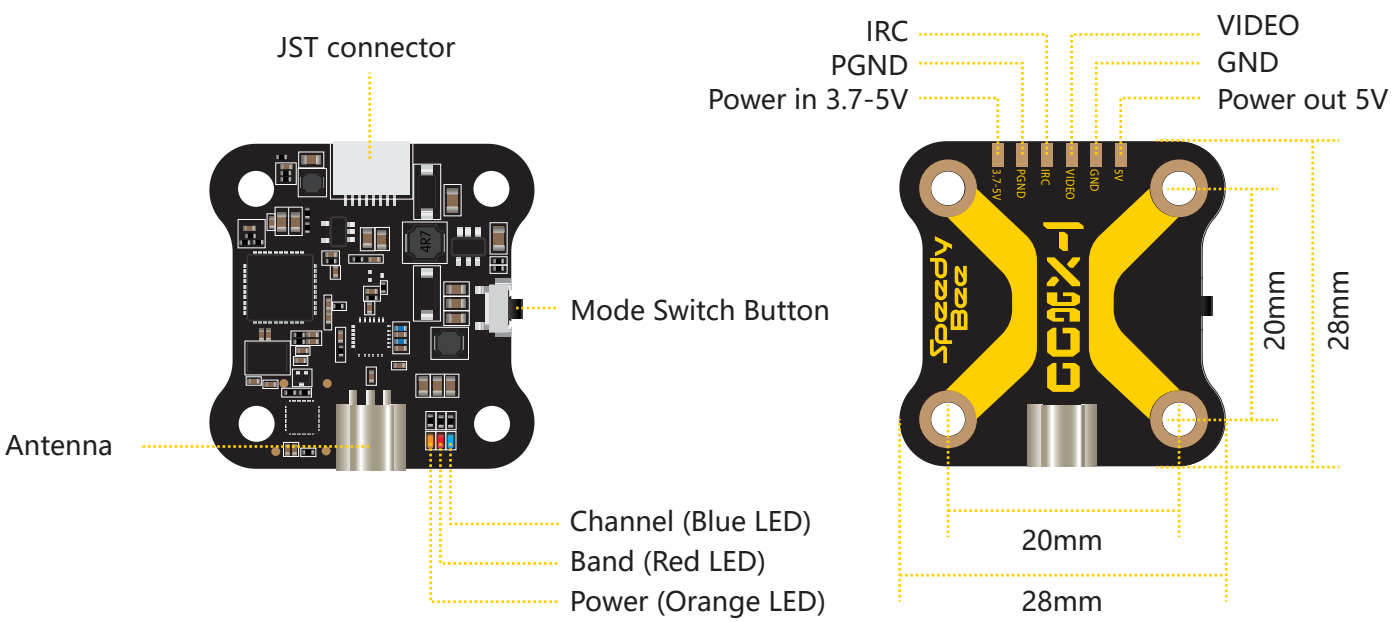

Notice: Please use the screws to install and fix the TX800 as the mainboard and the cover are separated.

LED / Mode	Channel (Blue LED)	Band (Red LED)	Power (Orange LED)
Lock	**Constantly ON:** The current frequency point is Channel 1 **OFF:** The current frequency point is one of Channel 2~Channel 8.	Red LED **will keep blinking**, at this time the Red LED is not used to indicate the current Band information.	Orange LED **will keep blinking**, at this time the Orange LED is not used for indicating the current Power information.
Unlock		**Constantly ON:** the current band is Band1, **OFF:** the current band is one of Band 2 ~ Band 6.	**Light OFF** — 25mW **Binking once in 2 seconds** — 200mW **Blinking once in 1 second** — 400mW **Constantly ON** — 800mW **Blinking twice in 1 second (fastFlash)** — PIT mode

Key Operation

Short press the button to switch CH1/2/3/4/5/6/7/8.

Long press the button for 2 seconds to enter the BAND mode; then short press to switch band1/2/3/4/5/6.

Long press 5 seconds to enter POWER mode; each 5-second press switches to 25/200/400/800mW in sequence.

Long press the button for 10 seconds to unlock/lock.

Support IRC Tramp Protocol

TX800 supports the IRC TRAMP protocol and the modification of video transmission parameters through the remote control,Including frequency, working power and so on. If your flight controller supports Bluetooth or WiFi,You can also modify the video transmission parameters through the SpeedyBee App.

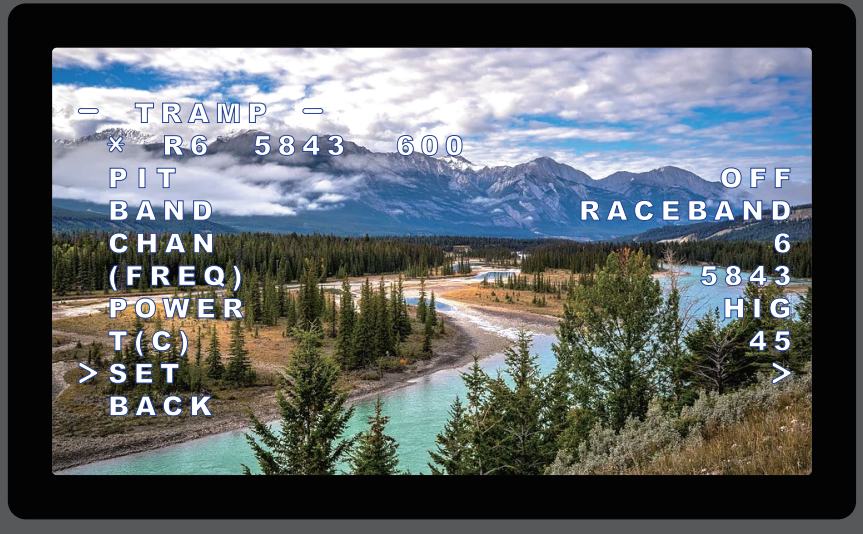

For BetaFlight flight controller firmware above BetaFlight 4.1.0, you need upload a VTX Table to the flight controller before using the remote control to modify the video transmitter parametersnormally.

download SpeedyBee-TX800(USA).json
download SpeedyBee-TX800(EU).json

For the use of the video transmitter table, please refer to this article "How to Setup Betaflight VTX Table – SmartAudio Tramp VTX Control"by Oscar Liang.

1. Flight controller wiring

Note: Take UART4 for example

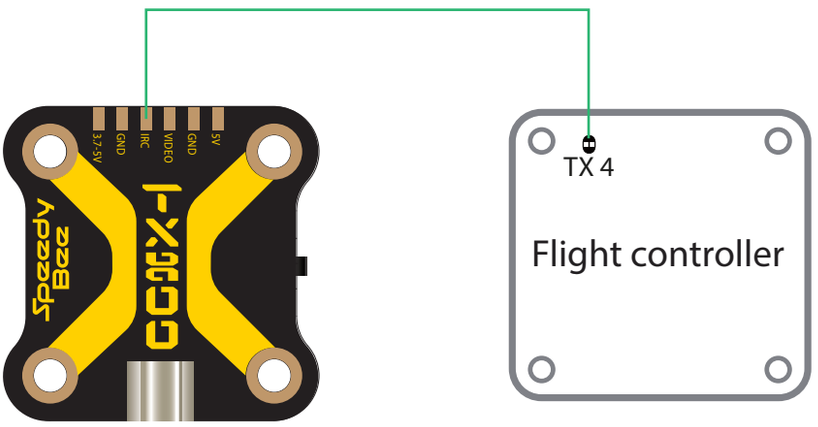

2.Betaflight 3.1 or above setting

Identifier	Configuration/MS	Serial Rx	Telemetry Output	Sensor Input	Per ipherals
USB VCP	115200		Disabled AUTO	Disabled AUTO	Disabled AUTO
UART1	115200		Disabled AUTO	Disabled AUTO	Disabled AUTO
UART2	115200		Disabled AUTO	Disabled AUTO	Disabled AUTO
UART3	115200		Disabled AUTO	Disabled AUTO	Disabled AUTO
UART4	115200		Disabled AUTO	Disabled AUTO	IRC Tramp AUTO
UART5	115200		Disabled AUTO	Disabled AUTO	Disabled AUTO

3. Remote control

Note: Take Mode-2 for example

1 BFCMS-FEATURES-VTX TR

2 Change Selection

3 Edit Setting Values

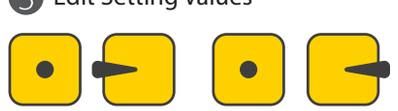

Frequency Table

Orange is a disabled channel in locked state

Channel	CH1	CH2	CH3	CH4	CH5	CH6	CH7	CH8
1 Band A	5865	5845	5825	5805	5785	5765	5745	5725
2 Band B	5733	5752	5771	5790	5809	5828	5847	5866
3 Band E	5705	5685	5665	5645	5885	5905	5925	5945
4 Airwave	5740	5760	5780	5800	5820	5840	5860	5880
5 Race Band	5658	5695	5732	5769	5806	5843	5880	5917