Wireless Trainer Quick Start

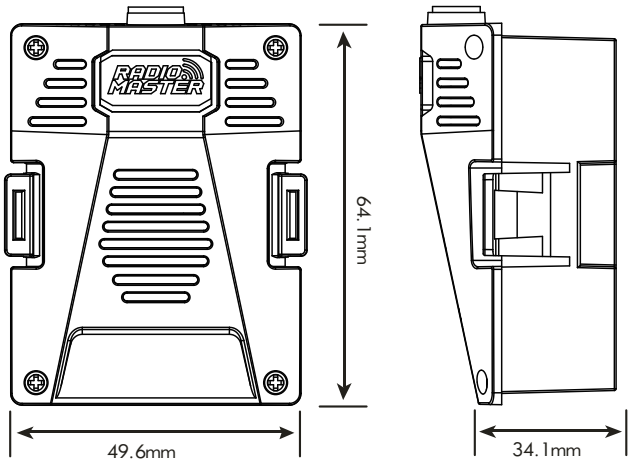

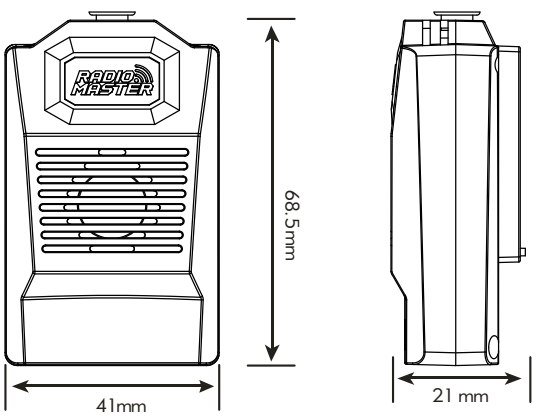

This manual provides step-by-step instructions for setting up and troubleshooting the RadioMaster Wireless Trainer Module. The module enables an instructor (master radio) to wirelessly connect with a student radio, allowing for shared control of a model.
The system is compatible with RadioMaster transmitters equipped with multi-protocol modules and receivers that support BUS output (e.g., SBUS, IBUS). This guide covers confi guring both radios, establishing a wireless connection, binding receivers, and verifying proper functionality.

Note:
Please ensure your radio is running the latest version of EdgeTX and that your internal ExpressLRS or MPM module is updated to the latest fi rmware. During testing, we identifi ed compatibility issues with older fi rmware versions. Keeping your fi rmware up to date will help ensure optimal performance and reliability.

SBUS Wireless trainer module for instructor/student radios

Compatibility
Any receiver that supports 5V and is capable of SBUS output, such as our RP1, RP2, and R81 V2 models, can be used. Receivers from other manufacturers can also be used, provided they meet the required voltage and SBUS specifications.

Applicable Models: [Micro] TX16S, BOXER / [Nano] GX12, Zorro, Pocket, MT12 (Not compatible with TX12MKII)

Setup
•Solder: SBUS receiver to module (Black: GND, Red: +, Yellow: Signal).
•Insert: Module into instructor radio (For the MicroModule: TX16S: SBUS_A, BOXER:SBUS_B).
•Bind: Student radio to module's receiver. Instructor radio to model's receiver.

Config
•Instructor: Trainer → Master/SBUS. Assign switch (e.g., SC) to toggle.
•Student: Trainer → OFF.

Check
•Test sticks in TRAINER menu. Toggle switch to verify control swap.

SPECIFICATIONS

•Working Voltage: DC 5.0 - 8.4V
•Receiver Interface Output Voltage: DC 5.0V
•Weight: Micro Module: 25.10g/Nano Module18.9g
•Dimensions: Micro: 33*48.7*68mm/Nano 26.3*71.2*42mm

INCLUDES

1x Wireless Trainer module Nano/Micro
1x Rx cable
* Please note receivers are not included

Full Instrucitons:

Setup on the Student (Slave) Radio
The student radio transmits control signals to the master radio via the Wireless Trainer Module.
Step 1: Bind the Receiver [Receiver not included]**
1.Bind the receiver to the student radio (slave) and ensure the receiver outputs an SBUSsignal.
2.Solder the receiver wires into the "Wireless Trainer Module":
•Black wire**: Ground (-)
•Red wire**: Positive (+)
•Yellow wire**: SBUS Signal
3.Insert the soldered receiver into the adapter interface: Note that the Micro Module has two connectors.

•TX16S:** Use SBUS_A
•BOXER:** Use SBUS_B

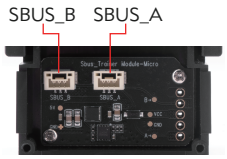

•GX12: ** Nano Module
•Zorro: ** Nano Module
•Pocket: **Nano Module
•MT12: ** Nano Module

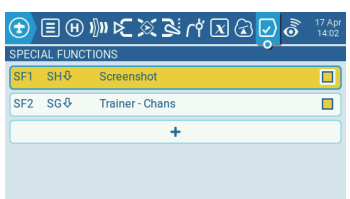

Step 2: Confi gure the Student Radio

•Press the MDL button to enter the SETUP menu.
•Set Trainer to OFF.

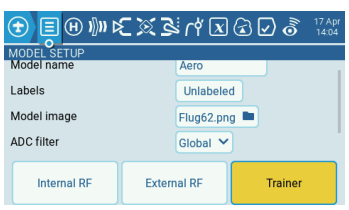

Setup on the Instructor (Master) Radio:
The instructor's radio is responsible for controlling the model and managing the trainer link.
Step 1: Enable Trainer Function

•Press the MDL button to open the SETUP menu.
•Set **Trainer** to Master/SBUS

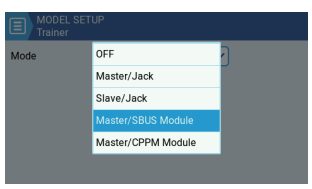

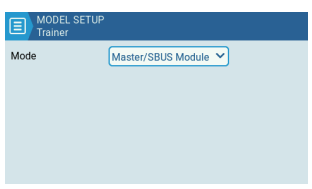

Step 2: Assign a Trainer Switch
•Press the **MDL** button to enter the **SPECIAL FUNCTIONS** menu.
•Assign a switch to toggle trainer mode (e.g., SC switch).

Step 3: Verify the Trainer Link
•Press the SYS button to open the TRAINER menu.
•Move the sticks on the student radio and confi rm corresponding channel movements on the master radio.

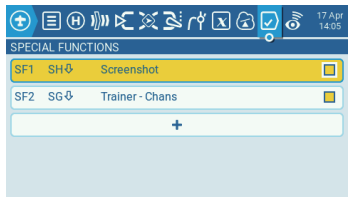

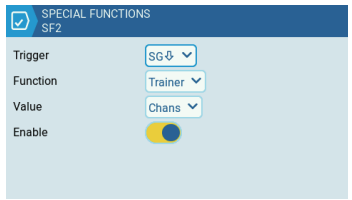

Troubleshooting Steps:
•Check Binding: Ensure both radios are bound to their receivers using the correct protocol. The Student radio should be bound to the receiver installed in the module. The teachers radio should be bound to the receiver in the model.
•Verify Wiring: Ensure proper soldering of receiver wires (Black: ground, Red: power, Yellow: signal).
•Confi rm RF Compatibility: The teacher and student radios do not need to use the same protocol, but they must be compatible with the trainer setup. For example, the teacher could be using an ExpressLRS radio bound to an ER6 receiver, while the student is using a FlySky radio with an SBUS receiver inside the trainer module. Ensure the trainer system is correctly confi gured to pass control between the radios.
•Check Trainer Mode: Verify the student radio is set to **Trainer OFF** and the master radio is set to **Master/SBUS**.
•Firmware Updates: Update radios and receivers from RadioMaster's support page to the latest fi rmware.
•Module Connection: Ensure the Wireless Trainer Module is securely inserted into the external module bay or BUS port.

Additional Notes:

•Compatibility: Micro module Works with RadioMaster TX16S, BOXER, Nano Module works with GX12, Zorro, Pocket and MT12 and receivers with a 5v SBUS serial output
•Pre-Flight Testing: Always test trainer functionality on the ground before flying.
•Support: Visit [RadioMasterRC.com](https://www.radiomasterrc.com) for firmware updates and troubleshooting assistance.

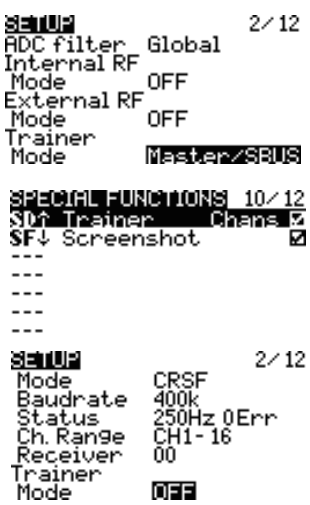

无线教练器快速入门指南

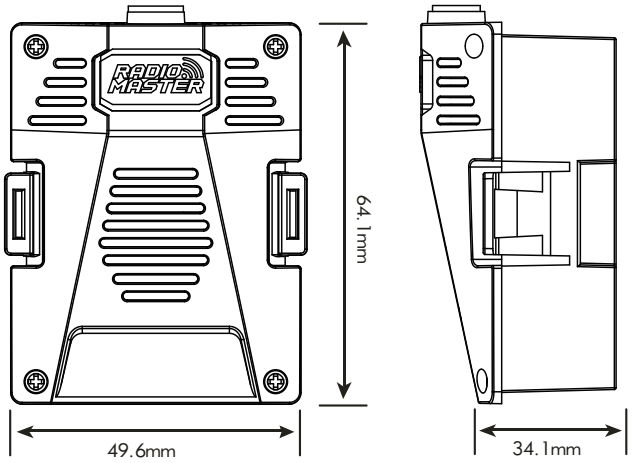

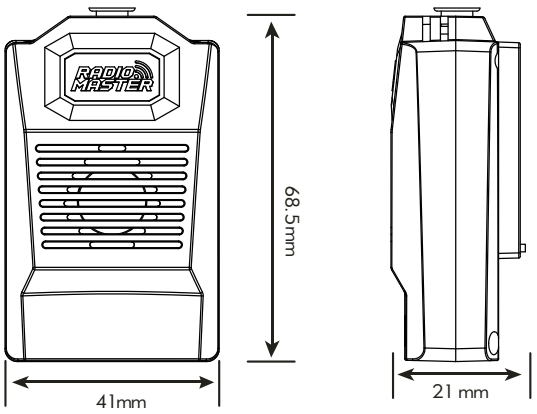

本手册提供 RadioMaster 无线教练模块 的详细分步操作指南，涵盖安装配置与故障排查流程。该模块可使教练端（主控遥控器）与学员遥控器（从属设备）建立无线连接，实现对模型的协同操控。
系统兼容性：支持配备多协议模块的RadioMaster 遥控器；接收机需具备总线信号输出 功能（如SBUS、IBUS）。指南覆盖主从遥控器配、无线链路建立、接收机对频操作、功能验证与调试。

注意：
请确保您的遥控器已升级至最新版 EdgeTX 固件，且内置的 ExpressLRS 或 多协议模块（MPM） 已更新至最新固件版本。测试中发现，旧版固件可能导致 兼容性问题。保持固件更新将确保系统运行稳定可靠。

SBUS无线教练模块（用于教练与学员遥控设备）

兼容
任何支持5V电压并具备SBUS信号输出的接收机均可使用，例如我们的RP1,RP2,RP3,RP4TD,RP4TD-M, BR1,BR3, ER6,ER8,ER8G,ER8GV, R81,R86C型号。其他厂商的接收机只要符合所需电压与SBUS规格要求，也可兼容

遥控器型号：
TX16SMKII, Boxer, GX12, Zorro, Pocket, MT12 （不兼容TX12MKII）

设置
•焊接：将SBUS接收机连接至模块（黑线：GND，红线：+5V，黄线：信号线）。
•插入：将模块安装至教练遥控器（MicroModule对应接口：TX16S使用SBUS_A，BOXER使用SBUS_B）。
•对频：学员遥控器与模块的接收机对频； 教练遥控器与模型的主接收机对频。

设置步骤
•教练端：将教练模式设为 主控/SBUS，并分配一个开关（例如 SC）作为模式切换键。
•学员端：将教练模式设为关闭。

检查
•进入TRAINER 菜单 测试摇杆操作； 拨动指定开关，确认控制权已成功切换。

规格参数

•工作电压: DC 5.0 - 8.4V
•接收机接口输出电压: DC 5.0V
•重量: Micro 模块: 25.10g/Nano 模块: 18.9g
•尺寸: Micro模块: 33*48.7*68mm/Nano模块: 26.3*71.2*42mm

包装清单

1x Sbus 无线教练模块（Micro接口或Nano接口）
1x GH1.25 3pin 接收机连接线
* 请注意，接收机不包含在内。

详细使用说明：

学员（从属）遥控器设置
学员遥控器通过无线教练模块向主控遥控器传输控制信号。

步骤1：对频接收机［接收机需自备］
1.将接收机与学员遥控器（从属）对频，并确保接收机输出 SBUS 信号。
2.将接收机线缆焊接至 无线教练模块 对应接口：
•黑线 → 地线（–）
•红线 → 正极（+）
•黄线 → SBUS 信号线
3.将焊接好的接收机插入适配器接口。
注意：Micro Module 配有两个连接器，请根据设备型号选择对应接口。

•TX16S:** 使用 SBUS_A
•BOXER:**使用 SBUS_B

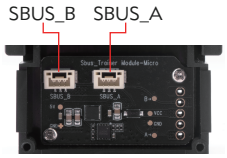

•GX12: ** Nano 模块
•Zorro: ** Nano 模块
•Pocket: **Nano 模块
•MT12: ** Nano 模块

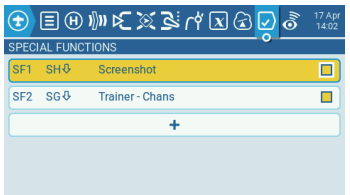

步骤2：配置学员遥控器

•按下 MDL 按钮进入设置菜单。
•将教练模式设为关闭。

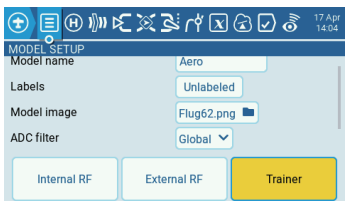

教练（主控）遥控器设置：
教练遥控器负责控制模型并管理教练链路。

步骤1：启用教练功能
•按下 MDL 按钮进入 设置菜单。
•将教练模式设为主控/SBUS。

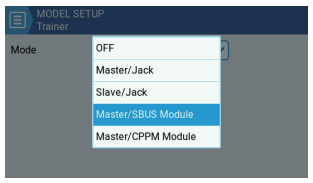

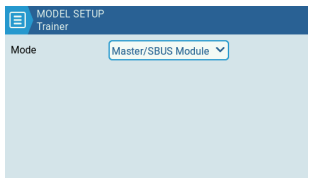

步骤2：分配教练模式开关
•按下 MDL 按钮进入 SPECIAL FUNCTIONS 菜单。
•分配一个物理开关（例如 SC 开关）用于切换教练模式。

步骤3：验证教练链路
•按下 SYS 按钮打开 TRAINER 菜单。
•操作学员遥控器摇杆，确认主控端对应通道是否同步响应。

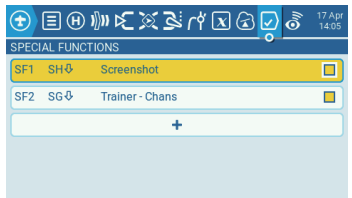

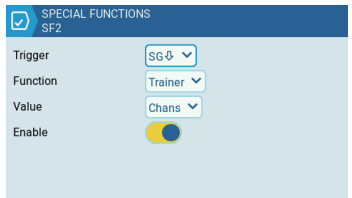

故障排查步骤：
•检查对频状态，确保教练与学员遥控器均使用正确协议与对应接收机完成对频：
学员端：需对频至安装在无线教练模块内的接收机；教练端：需对频至模型内部的主接收机。
•验证接线，检查接收器线缆焊接是否正确：黑线 → 地线（–），红线 → 电源正极（+），黄线 → SBUS 信号线
•确认射频兼容性，教练与学员遥控器无需使用相同协议，但需满足教练系统兼容性（例）：教练端可搭配ExpressLRS协议的ER6接收机；学员端可搭配FlySky品牌的SBUS接收机（需安装于教练模块内）。确保教练系统配置正确，实现跨协议控制信号传递。
•检查教练模式设置，学员端：确认教练模式设为 关闭（Trainer OFF）；教练端：确认教练模式设为 主控/SBUS（Master/SBUS）。
•固件升级，访问RadioMaster官方支持页面，将遥控器及接收机升级至最新固件版本。
•模块连接检查，确保无线教练模块已牢固插入遥控器的外部模块仓或BUS端口。

附加说明：
•兼容性：Micro Module：适用于RadioMaster TX16S、BOXER遥控器；Nano Module：适用于 GX12、Zorro、Pocket 及 MT12 遥控器；所有接收机需支持5V SBUS串行信号输出。
•飞行前测试：起飞前务必在地面全面测试教练器功能，确保控制权切换正常。
•技术支持：固件升级与故障排查，请访问官方支持页面：RadioMasterRC.com。