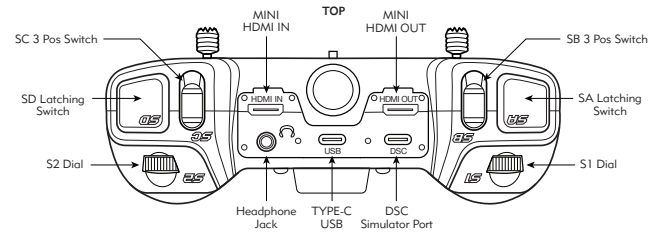

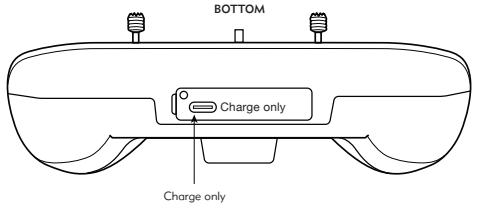

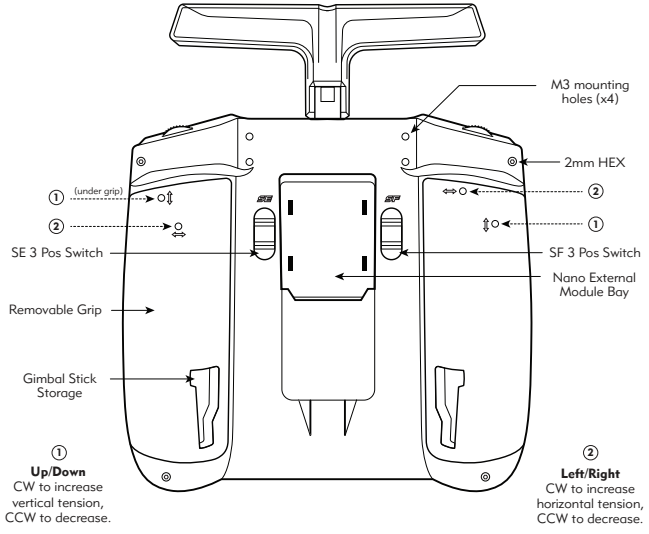

RADIOMASTER A2.3

EU SIMPLE DECLARATION OF CONFORMITY

RadioMaster declares the radio equipment AX12 is in compliance with EU directives Directive 2014/53/EU.

Manufacturer by
ShenZhen RadioMaster Co., Ltd
3th Floor, Yangtian Building, No. 18 Yangtian Road, Xin'an Street, Baoan District, Shenzhen, Guangdong

FCC ID: 2BUHG-AX12

FCC Information
This equipment has been tested and found to comply with the limits for Part 15 of the FCC rules. This device complies with part 15 of the FCC rules. Operation is subject to the following two conditions: (1) This device may not cause harmful interference, and (2) this device must accept any interference received, including interference that may cause undesired operation. Full text of the declaration of conformity:

WWW.RADIOMASTERRC.COM

RADIOMASTER AX12

2.4 GHZ

Quick Start Guide

640 GRAMS

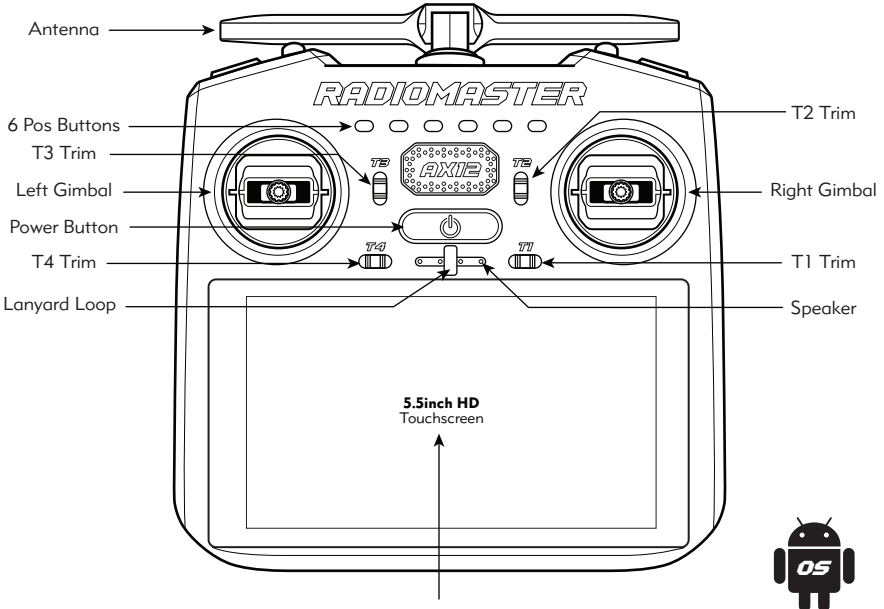

LITHIUM BATTERIES (BUILT-IN)

64-bit ANDROID
OPERATING SYSTEM

SPECIFICATIONS

• Item:	AX12 Radio
• Size:	171*168*73mm
• Weight:	640g
• Processor (CPU):	8 cores 4 * Cortex-A73 2.0GHz 4 * Cortex-A53 2.0GHz
• Graphics Processor:	ARM Mali-G72 700MHz
• Control distance:	Max 2Km
• Frequency:	2.400GHz-2.480GHz
• Transmitter:	Built-in ExpressLRS 2.4GHz
• Transmission Power:	Up to 24dbm
• Antenna Gain:	2dB
• Channels:	Max 16 channels
• Gimbal:	X5 Hall Effect
• Update Method:	Online updates

INTRODUCTION

Thank you for purchasing the RadioMaster AX12 remote control system. This system is versatile and suitable for both beginners and professionals. To ensure proper and safe use of this product, please read this instruction manual carefully before use. Changes have been made due to version upgrades. The information contained in this manual is subject to change without notice.

The AX12 remote control is suitable for all types of RC models. The model type can be customized according to the setup used, and various mixed control functions are available.

Follow the links for more detailed guides, firmware updates, and additional resources.

-The RadioMaster team

SAFETY INFORMATION

Many radio control models are equipped with powerful motors and sharp spinning propellers. Please exercise caution when working on models. Ensure power is disconnected from your models and remove propellers when performing maintenance.

Do not operate the AX12 remote control system under the following conditions:

- In severe weather or strong windy conditions, such as rain, hail, snow, storms or electromagnetic environments.
- In any situation where visibility is limited.
- In areas where people, property, high-voltage power lines, public roads, vehicles or animals may be present.
- If you feel tired or unwell, or under the influence of drugs or alcohol.
- If the remote control or model seems to be damaged or not working properly.
- In areas with high 2.4GHz or 900MHz interference or where these radio frequencies are prohibited.
- When the radio's battery voltage is too low to be used.
- In areas where local regulations prohibit the use of models.

ANTENNA SEPARATION DISTANCE

When operating your RadioMaster transmitter, please be sure to maintain a separation distance of at least 20 cm between your body (excluding fingers, hands, wrists, ankles and feet) and the antenna to meet RF exposure safety requirements as determined by FCC regulations.

BATTERIES & CHARGING

AX12 features built-in lithium battery with USB-C charging capability. The charging circuit is designed exclusively for the internal lithium-ion battery, which has a nominal voltage of 3.7V and a maximum charging voltage of 4.2V.

Please use a standard USB 5V charger with a minimum requirement of 5V/2A. You may use a USB 5V charger with an output current higher than 2A. Note that some smartphone chargers with proprietary fast-charging protocols may not be compatible.

Regularly check the battery's voltage and condition, and never charge it unattended. Always charge in a safe area away from flammable materials. Do not charge the transmitter if it gets wet or is damaged in any way.

RadioMaster shall not be held liable for any adverse consequences resulting from improper use or misuse of this product in violation of safety guidelines.

WARRANTY & REPAIR

If there is any problem with your remote control hardware, please keep the proof of purchase and contact the retailer where you purchased the AX12.

You may also visit our warranty support page: **www.radiomasterrc.com/pages/contact**

WARNING

The AX12 comes pre-installed with the most stable firmware from the factory. The system will be continuously upgraded to add more exciting features. Please use the online update function provided by the APP software.

The Android system is a completely open operating system. Please ensure that you do not install or use any apps from untrusted sources. Apps of unknown origin may cause the Android system to malfunction, preventing you from using the remote control normally.

CAUTION

Changes or modifications not expressly approved by the party responsible for compliance could void the user's authority to operate the equipment. This product contains a radio transmitter with wireless technology which has been tested and found to be compliant with the applicable regulations governing a radio transmitter in the specified frequency range.

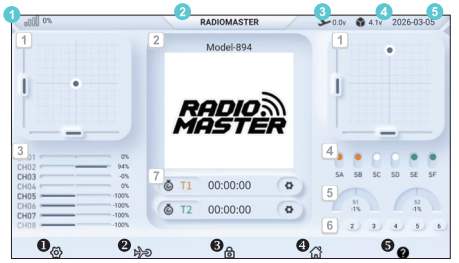

The default home page of the system, which includes basic information about the remote control.

Top bar display:

1. **Signal Strength:** After the remote controller and receiver are paired and connected, you can view the signal status and return link quality.
2. **Device name:** Middle displays the device name, which can be customized in the system settings.
3. **Aircraft terminal voltage:** When using a receiver with voltage feedback or a flight controller with voltage feedback, the battery voltage at the aircraft terminal can be displayed in real time.
4. **Remote control voltage:** Displays the real-time voltage of the remote control.
5. **Date:** Display the current date.

Bottom bar display:

❶ **System Settings:** Enter System Settings
❷ **Model settings:** Enter Model Settings
❸ **Lock screen:** Lock the Screen
❹ **Home Screen:** Tap to return to Main Interface
❺ **Help:** Tap to display to Help and Settings

Main screen display:

1. **Joystick Position:** Graphical real-time display of joystick position.
2. **Model name and image:** Displays the current model name and image.
3. **Channel Output:** Real-time display CH01-CH08.
4. **Switchs:** Displays all switch positions in real time.
5. **Pots:** Displays the knob position in real time.
6. **6-position buttons:** Real-time display of 6 button positions.
7. **Timer T1/T2:** Display T1/T2 timer time, tap the gear icon to enter T1/T2 timer settings.

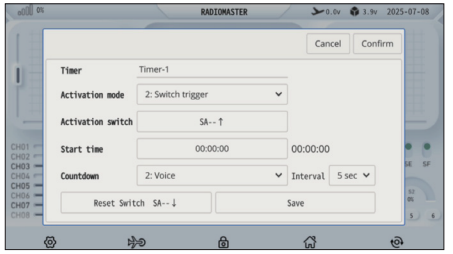

- **Activation mode:** Options include always-on, switch-triggered functions, and more.
- **Activation switch:** Set timer activation switch.
- **Start time:** When the start time is 00:00:00, it functions as a count-up timer. When any other time is set, it will switch to countdown mode.
- **Countdown:** Optional countdown announcement methods include mute, beep, or voice prompts.
- **Interval:** Countdown notification interval.
- **Reset Switch:** Set the timer reset switch.

ExpressLRS:

The ELRS page allows you to view and configure all ELRS functions, turn the ELRS RF module (transmitter) on/off, and select between the built-in or external ELRS module. Additionally, you can update the built-in ELRS RF module via the USB port on top of the transmitter.

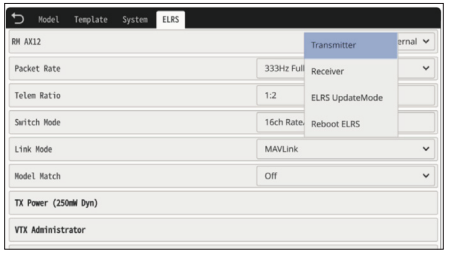

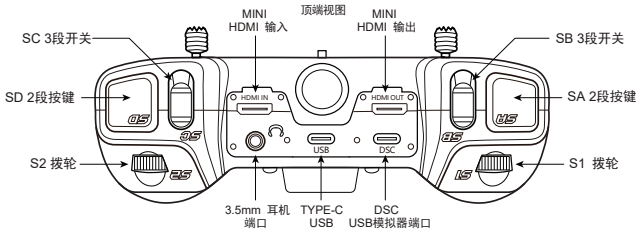

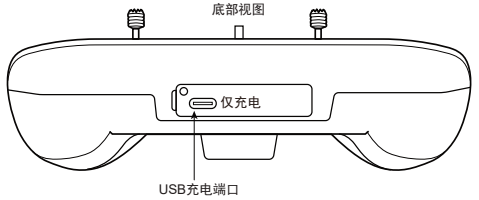

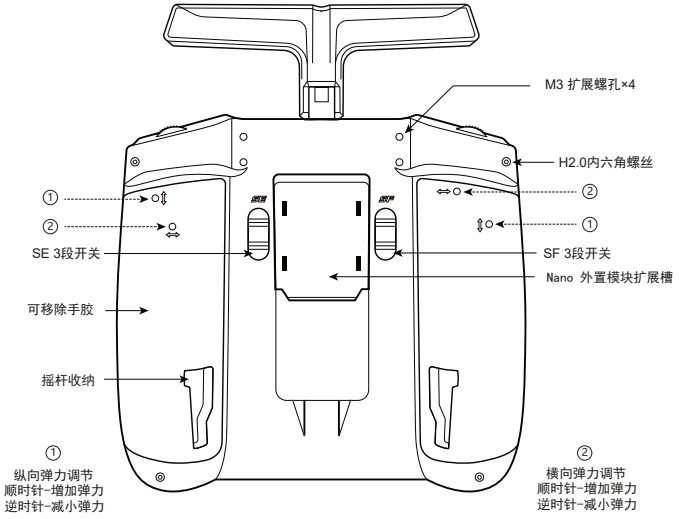

RADIOMASTER

欧盟简化符合性声明

RadioMaster 声明无线电设备 AX12
符合欧盟指令 Directive 2014/53/EU。

制造商信息：
深圳阿尔木创新科技有限公司
地址：深圳市宝安区新安街道扬田路扬田大厦3楼
官方网站：www.radiomasterrc.com

CE FC

FCC ID: 2BUHG-AX12

FCC 合规声明

本设备符合美国联邦通信委员会（FCC）第15部分的相关规定。操作须符合以下两个条件：
1. 本设备不得产生有害干扰；
2. 本设备必须接受所接收到的任何干扰，包括可能引起设备异常工作的干扰。
警告：未经负责合规的相关方明确批准而进行的任何更改或修改，可能导致用户丧失操作本设备的合法权限。
说明：本设备经过测试，符合FCC第15部分中B类数字设备的限制。这些限制旨在为家庭安装环境提供合理的防干扰保护。

RADIOMASTER AX12

2.4 GHZ

快速指南

640 GRAMS

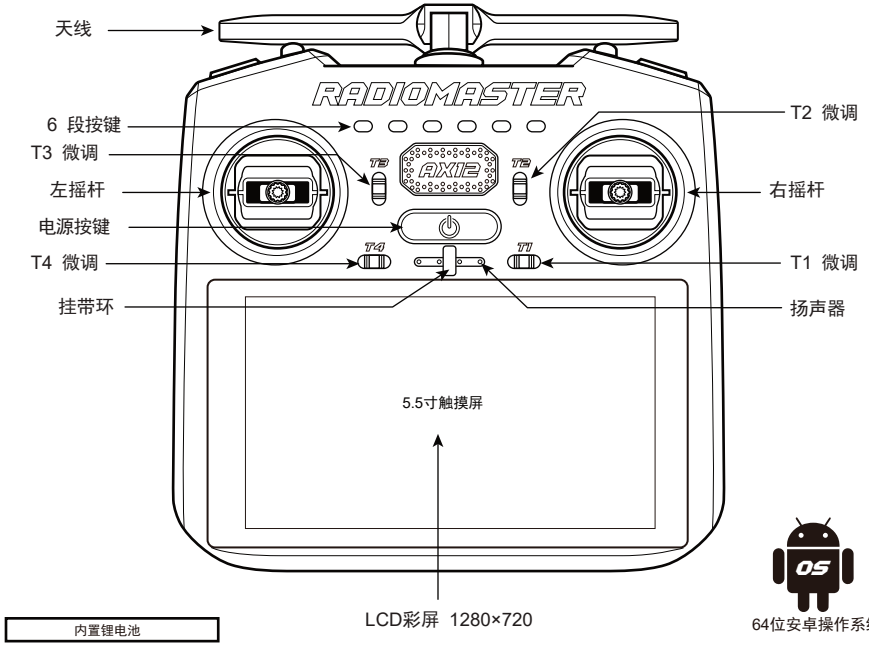

64位安卓操作系统

规格参数

- 产品：AX12 遥控器
- 尺寸：171×168×73mm
- 重量：640g
- 处理器（CPU）：8核心
  4 * Cortex-A73 2.0GHz
  4 * Cortex-A53 2.0GHz
- 图形处理器（GPU）：ARM Mali-G72 700MHz
- 控制距离：2千米
- 频率：2.400GHz-2.480GHz
- 高频头：内置 ExpressLRS 2.4GHz高频头
- 发射功率：最高 20dBm
- 天线增益：2dB
- 通道数：最多16 通道
- 摇杆：X5 霍尔摇杆
- 更新方式：在线更新

简介

感谢您购买 RadioMaster AX12 遥控系统。该系统功能多样，适用于初学者和专业人士。为确保正确和安全使用本产品，请在使用前仔细阅读本说明书。由于版本升级，内容可能会有所更改。本手册中包含的信息如有变更，恕不另行通知。

AX12 遥控器适用于各种遥控模型。可根据所使用的模型自定义模型类型，并提供多种混控功能。

请访问以下链接获取更详细的指南、固件更新和其他资源。

——RadioMaster 团队

安全信息

请勿在以下情况下操作 AX12 遥控系统：

- 恶劣天气或强风条件下，如下雨、冰雹、下雪、暴风雨或电磁环境。
- 能见度受限的任何情况。
- 有人员、财产、高压电线、公共道路、车辆或动物存在的区域。
- 感到疲劳或身体不适，或在药物或酒精影响下。
- 遥控器或模型似乎损坏或工作不正常时。
- 干扰较强的区域或禁止使用这些无线电频率的区域。
- 遥控器电池电压过低无法使用时。
- 当地法规禁止使用遥控模型的区域。

天线分离距离

操作 RadioMaster 发射器时，请确保您的身体（不包括手指、手、手腕、脚踝和脚）与天线之间保持至少 20 厘米的分离距离，以符合 FCC 等 法规规定的射频暴露安全要求。

电池与充电

AX12 内置锂电池，支持 USB-C 充电。充电电路专为内部锂离子电池设计，标称电压为3.7V，最大充电电压为 4.2V。

请使用标准 USB 5V 充电器，最低要求为 5V/2A。您也可以使用输出电流高于 2A 的 USB 5V 充电器。请注意，某些带有私有快充协议的智能手机充电器可能不兼容。

定期检查电池电压和状态，切勿在无人看管时充电。始终在远离易燃材料的区域充电。如果发射器进水或以任何方式损坏，请勿充电。

对于因违反安全指南使用或误用本产品而导致的任何不良后果，RadioMaster 不承担任何责任。

保修与维修

如果您的遥控器硬件有任何问题，请保留购买凭证并联系您购买 AX12 的零售商。

您也可以访问我们的保修支持页面：
www.radiomasterrc.com/pages/contact

警告

AX12 出厂时预装了最稳定的固件。系统将持续升级以添加更多精彩功能。请使用 APP 软件提供的在线更新功能。

Android 系统是一个完全开放的操作系统。请确保不要安装或使用来自不可信来源的任何应用程序。来自未知来源的应用程序可能导致 Android 系统故障，使您无法正常使用遥控器。

注意

未经合规负责方明确批准的任何更改或修改都可能使用户操作设备的权限失效。本产品包含一个无线技术射频发射器，已测试并确认符合指定频率范围内射频发射器的适用法规。

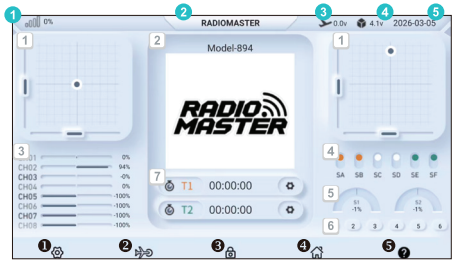

系统主界面
这是系统的默认主页，包含遥控器的基本信息。

顶部状态栏显示

1. 信号强度
   遥控器与接收器配对连接后，可查看信号状态和回传链路质量。
2. 设备名称
   中间显示设备名称，可在系统设置中自定义。
3. 接收器器端电压
   当使用具有电压反馈功能的接收器或飞控时，可实时显示飞行器端的电池电压。
4. 遥控器电压
   显示遥控器的实时电压。
5. 日期
   显示当前日期。

底部导航栏显示

❶ 系统设置：进入系统设置
❷ 模型设置：进入模型设置
❸ 锁屏：锁定屏幕
❹ 主页：点击返回主界面
❺ 帮助：点击显示帮助和设置

主屏幕显示

1. 摇杆图形 摇杆位置的图形化实时显示
2. 模型名称和图片 显示当前模型名称和图片
3. 通道输出 实时显示 CH01-CH08
4. 开关状态 实时显示所有开关位置
5. 旋钮 实时显示旋钮位置
6. 六段按键 实时显示6段按键位置
7. 计时器 T1/T2：显示 T1/T2 计时器时间
   点击齿轮图标进入 T1/T2 计时器设置

计时器设置说明

激活模式：选项包括常开、开关触发等功能

激活开关：设置定时器激活开关

开始时间：当开始时间为 00:00:00 时，作为正计时器使用。设置其他时间后将切换为倒计时模式。

倒数通知：可选的倒计时播报方式包括静音、蜂鸣或语音提示

间隔：倒计时通知间隔

复位开关：设置定时器复位开关

ExpressLRS 设置

ELRS 页面允许您查看和配置所有 ELRS 功能，开启/关闭 ELRS RF 模块（发射器），并在内置和外置 ELRS 模块之间选择。此外，您可以通过发射器顶部的 USB 接口更新内置的 ExpressLRS RF 模块。