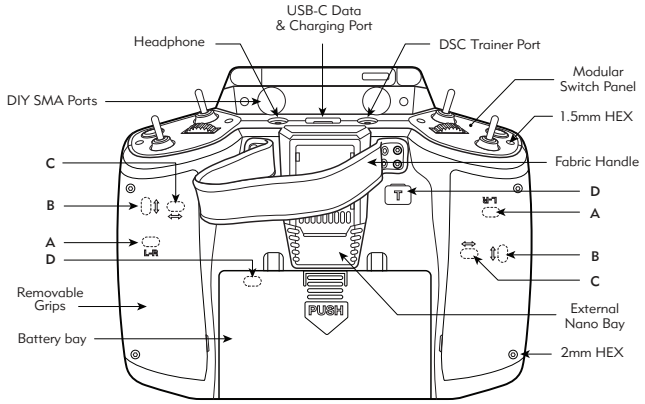

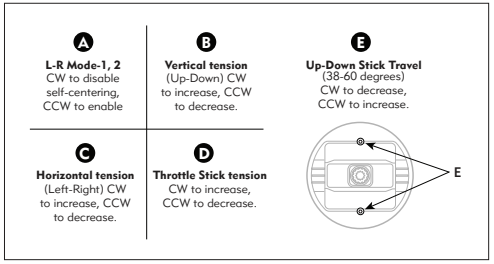

Default: Soft Tension Springs (Low Tension Gimbal Springs included.)

CAUTION

Changes or modifications not expressly approved by the party responsible for compliance could void the user's authority to operate the equipment. This product contains a radio transmitter with wireless technology which has been tested and found to be compliant with the applicable regulations governing a radio transmitter in the specified frequency range.

ANTENNA SEPARATION DISTANCE

When operating your RadioMaster transmitter, please be sure to maintain a separation distance of at least 20 cm between your body (excluding fingers, hands, wrists, ankles and feet) and the antenna to meet RF exposure safety requirements as determined by FCC regulations.

WWW.RADIOMASTERRC.COM

EU SIMPLE DECLARATION OF CONFORMITY

RadioMaster declares the radio equipment GX12 is in compliance with EU directives Directive 2014/53/EU.

Manufacturer by
ShenZhen RadioMaster Co., Ltd
3th Floor, Yangtian Building, No. 18 Yangtian Road, Xin'an Street, Baoan District, Shenzhen, Guangdong

FCC ID: 2BBP3-GX12

FCC Information
This equipment has been tested and found to comply with the limits for Part 15 of the FCC rules. This device complies with part 15 of the FCC rules. Operation is subject to the following two conditions: (1) This device may not cause harmful interference, and (2) this device must accept any interference received, including interference that may cause undesired operation.

Full text of the declaration of conformity is available at:
www.radiomasterrc.com

RADIOMASTER GX12

2.4 GHZ

Quick Start Guide

SUB-G

Gemini-Xross Dual-Band

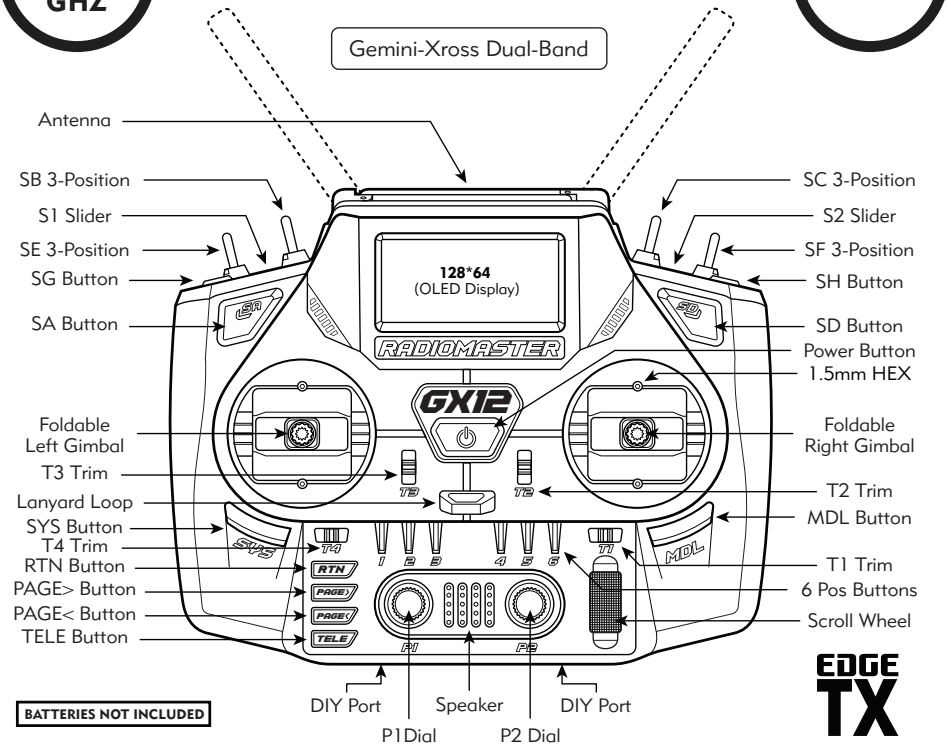

BATTERIES NOT INCLUDED

EDGE TX

SPECIFICATIONS

- Item: GX12 Radio
- Size: 183*148*78mm
- Weight: 573g
- Frequency: 2.400GHz & Sub-G
- Internal RF Options: ELRS 2.4GHz/Sub-G
- Supported Protocols: ExpressLRS
- Voltage Range: 6.6-8.4V DC
- Firmware: EdgeTX
- Channels: Max 16 channels (RX dependent)
- Battery Options: 7.4V 2-cell Lithium-Polymer or 2x 3.7V 18650 Lithium-Ion
- LCD Display: 128*64 Monochrome OLED
- Gimbals: GX01 1000Hz, Digital CNC
- Gimbal Sticks: 3mm
- External module: Nano compatible
- Upgrade Method: USB / EdgeTX Companion
- Memory: 512Mb Intergrated Flash
- Charging: 2S Smart Balance Charging

INTRODUCTION

Thank you for choosing the RadioMaster GX12, a versatile remote control system featuring dual-band capabilities with 2.4GHz, Sub-G, and Gemini-Xrossband technology. Whether you're a beginner or a seasoned professional, the GX12 is designed to meet your needs, offering precision, flexibility, and reliability.

Please read this guide carefully before operating your new remote to ensure safe and optimal use. We may release updated versions of this manual as we continually enhance our software and hardware. For the latest information and resources, please visit our website.

The GX12 remote control device is suitable for all types of model products as well as any other equipment you may build—as long as you can assemble it, then GX12 will be able to control it.

Powered by the robust EdgeTX platform, the GX12 is equipped for seamless integration with your projects.

Follow the links for more detailed guides, firmware updates, and additional resources.

-The RadioMaster team

SAFETY INFORMATION

Many remote-control models are equipped with powerful motors and sharp propellers. When using or maintaining models, proceed with caution. When performing assembly or maintenance, make sure to disconnect the power to the model and remove the propellers.

Do not operate the GX12 remote control system under the following conditions:

- In severe weather or strong windy conditions, such as rain, hail, snow, storms or electromagnetic environments.
- In any situation where visibility is limited.
- In areas where people, property, high-voltage power lines, public roads, vehicles or animals may be present.
- If you feel tired or unwell, or under the influence of drugs or alcohol.
- If the remote control or model seems to be damaged or not working properly.
- In areas with high 2.4GHz or Sub-G interference or where these radio frequencies are prohibited.
- When the radios battery voltage is too low to be used.
- In areas where local regulations prohibit the use of R/C aircraft.

IMPORTANT

FIRMWARE: The GX12 is pre-installed with the most stable firmware at the factory at time of release. please only attempt to update the firmware if you are confident in the process. Incorrect firmware updates may cause the remote control to become inoperable.

MANUAL & FIRMWARE DOWNLOAD

GX12 is pre-installed with factory approved EdgeTX firmware. To download the latest software manual, please visit the RadioMaster website:
www.radiomasterrc.com

Further firmware information:
EdgeTX: **www.edgetx.org**
ExpressLRS: **www.expresslrs.org**

BATTERIES & CHARGING

GX12 has a built-in USB-C smart balance charging function designed specifically for 3.7V lithium batteries. The charging circuit is only designed to charge 2x 3.7V Li-ion 18650 or 2x 3.7V Li-Poly batteries (2s 7.4v Lipo battery pack), the nominal battery voltage is 3.7V, the charged voltage is 4.2V/Cell.

DO NOT use LiFE battery packs or 18650 lithium-ion batteries with a nominal voltage of 3.6v with a fully charged voltage of 4.1V. Charging the incorrect type of battery may damage the charger or cause a fire.

If using Li-ion, ensure the cells are not protected and are button-top cells.

Please check the voltage and condition of the battery regularly and never charge unattended. Always charge in a safe area away from combustible materials. Refrain from charging if the remote control gets wet or damaged in any way. **DO NOT** charge with the polarity reversed.

Disclaimer: RadioMaster does not assume any responsibility for any adverse consequences caused by the use or misuse of this product.

MODEL & PROTOCOL SELECTION

The GX12 is equipped with a built-in dual-band, dual-frequency ExpressLRS RF module, offering compatibility with a wide range of receivers:

- 2.4GHz receivers
- Sub-GHz receivers
- Gemini-Xross dual-band receivers

Packet Rate Selection:

To select the appropriate Packet Rate on your GX12 remote control, follow these options based on the receiver type:

- **50Hz-500Hz 2.4G**: For binding with any ELRS 2.4GHz receiver.
- **50Hz-200Hz Low Band**: This is for binding with any ELRS Sub-GHz receiver.
- **X100 and X150**: For use with Gemini Xross dual-band receivers.
- **DK250/DK500/K1000**: These are new FSK high-speed modes for LR1121-based receivers.

For a detailed receiver compatibility chart, visit the RadioMaster manuals page.

Binding Instructions:

1. **TURN OFF** the transmitter.
2. Cycle power to the receiver 3 times, the receiver LED will flash twice - indicating bind mode.
3. **TURN ON** the transmitter, long press the **SYS** button and choose **ExpressLRS LUA** under the **TOOLS** menu.
4. Scroll to **[Bind]** and press enter.
5. The LED on the receiver should now be solid, indicating a successful bind.

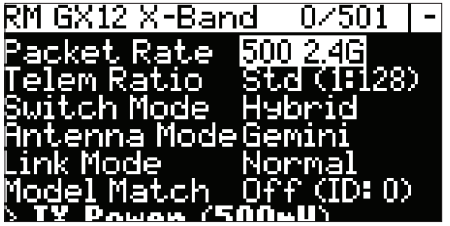

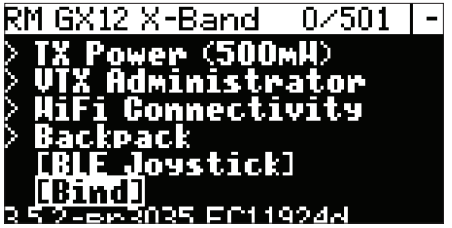

GIMBAL CALIBRATION

The gimbals are factory calibrated. It is ONLY necessary to re-calibrate the gimbals using the Calibration App if the gimbals have been removed from the radio for service.

WARRANTY & REPAIR

If there is any problem with your remote control hardware, please keep the proof of purchase and contact the retailer where you purchased the GX12.

You may also visit our warranty support page:
www.radiomasterrc.com/contact

INCLUDES

1 x GX12 Crush Radio Controller
1 x Signature Carry Case
1 x 18650 Battery Tray
2 x Replacement Switch Panels
1 x Type-C Cable
1 x Screen Protector
1 x 1.5mm Hex Wrench
4 x High Tension Gimbals Springs
6 x Switch Delete Plugs
1 x 2 Position Switch
1 x Momentary Switch
1 x RadioMaster Sticker Set
1 x GX12 Manual

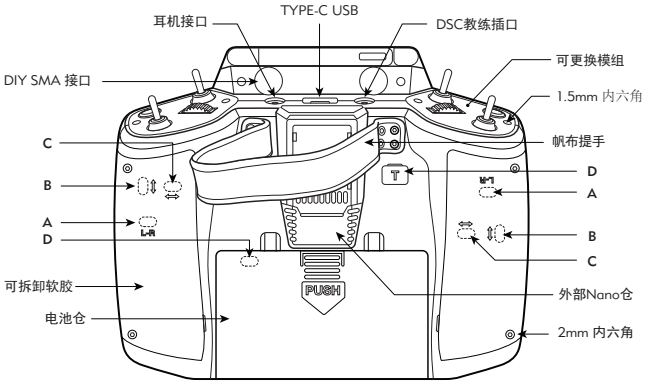

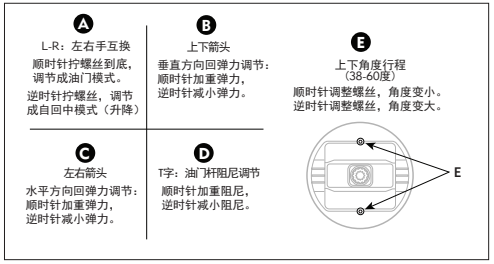

默认设置：低张力弹簧（包含低张力摇杆弹簧）

警告

未经负责合规方明确批准的更改或修改可能会使用户丧失操作设备的权限。
本产品包含具有天线技术的无线电发射器，该无线电发射器已经过测试，符
合适用于2.400GHz至2.4835GHz频率范围内的无线电发射器的适用法规。

安全的天线距离

操作RadioMaster发射器时，请确保您的身体（不包括手指，手，腕，脚踝和脚）与天线之间保持至少20cm的距离，以符合FCC法规确定的RF暴露安全要求。

欧盟认证合格声明

RadioMaster无线电设备GX12符合欧盟指令2014/53/EU的要求。

制造商
深圳RadioMaster有限公司
深圳市宝安区新安街道扬田路扬田大厦3楼

FCC ID: 2BBP3-GX12

FCC 警示

该设备已经过测试，符合FCC规则第15章的规定。操作必须符合以下两个条件：
（1）此设备不会造成有害干扰
（2）此设备必须接受收到的任何干扰，包括可能导致意外操作的干扰。
符合性声明的全文可在以下网站上找到：
www.radiomasterrc.com

CE FC A1.8

WWW.RADIOMASTERRC.COM

RADIOMASTER GX12

2.4 GHZ

快速操作指南

电压范围
6.6-8.4V DC

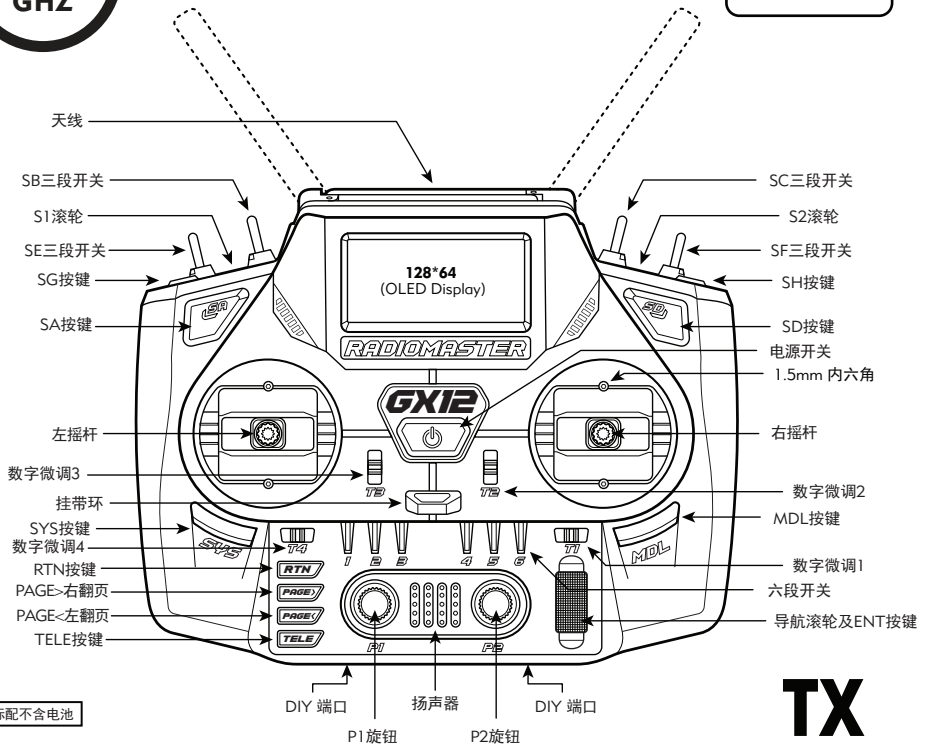

标配不含电池

TX

技术参数

- 产品型号：GX12 遥控器
- 产品尺寸：183*148*78mm
- 重量：573g
- 工作频率：2.400GHz
- 内部射频：ExpressLRS 2.4GHz
- 支持的协议：ExpressLRS
- 工作电压：6.6-8.4V DC
- 操作系统：EdgeTX
- 控制通道：最多支持16通道（取决于接收机）
- 电池：7.4V 2芯锂离子聚合物电池
  2芯 3.7V 18650锂离子电池（不含电池）
- 显示屏：128*64 OLED显示屏
- 摇杆：GX01 3D数字化CNC霍尔摇杆（输出速率达1000Hz）
- 控制距离：最大2km
- 模块：Nano兼容扩展仓
- 固件升级方式：USB / EdgeTX 配套电脑软件
- 内存：512Mb 内置闪存
- 充电：智能平衡充电

简介

感谢您购买RadioMaster GX12 2.4G遥控系统。该系统用途广泛，可供初学者和专业人士使用。为了确保正确、安全地使用本产品，请在使用前仔细阅读本使用说明书。由于版本升级，已经进行了更改。本手册中包含的信息如有更改，恕不另行通知。

GX12遥控器适用于所有类型的模型。可以根据使用的遥控模型选择型号类型，并可以使用各种混合功能。

-RadioMaster 团队敬上

警告

天线：在安装电池和打开遥控器之前，请将所提供的天线安装在遥控器的顶部。
禁止在未安装天线时打开内部射频模块的情况下使用，这样做会损坏内部射频模块，并且不在保修范围内。

固件更新：GX12在出厂时预装了最稳定的固件，请仅在您对更新过程有信心的情况下尝试更新固件。不正确的固件更新可能导致远程控制无法操作。

手册和固件下载

GX12 预装标准的EdgeTX固件。要下载最新的软件手册，请访问RadioMaster网站：
www.radiomasterrc.com

更多固件信息请访问：
EdgeTX: **www.edgetx.org**
ExpressLRS: **www.expresslrs.org**
Multi Protocol Module: **www.multi-module.org**

安全须知

许多遥控模型都配备了强大的电机和锋利的螺旋桨。使用模型时，请谨慎行事。进行组装或维护时，请确保已断开模型的电源并卸下螺旋桨。

在以下情况下，请勿操作GX12遥控系统：

- 在恶劣天气或强风条件下，例如雨，冰雹，下雪，暴风雨或电磁环境中。
- 在能见度有限的任何情况下。
- 在可能存在人员、财产、电力高压线、公共道路、有车辆或动物的区域。
- 如果您感到疲倦或不适，或在药物或酒精的影响下。
- 如果遥控器或模型似乎已损坏或无法正常工作。
- 在2.4GHz干扰较大的区域或禁止使用2.4GHz无线电的地方。
- 当电池电压太低而无法使用时。
- 在当地法规禁止使用遥控模型的区域。

电源和充电注意事项

GX12内置USB-C充电功能，可用于3.7v至4.2v的锂电池。该充电电路仅适用于2x 3.7v锂离子18650电池或2x 3.7v Lipoly电池(2s 7.4v Lipo电池组)，标称电池电压为3.7v，最大充电电压为4.2v。

不要使用标称电压为3.6v至4.10v的寿命电池组或18650锂离子电池。给不正确的电池充电可能会损坏充电 器或引起火灾。请确保电池正负极未接反。

请定期检查电池的电压和状态，切勿在无人看管的情况下充电，在远离易燃材料的安全区域充电。如果遥控器被水打湿或损坏了，请勿给它充电。

RadioMaster不承担因使用或误用本产品而造成的任何不良后果。

模型选择及协议选择

GX12内置双路ExpressLRS 2.4GHz高频模块，可以兼容所有2.4GHz接收机。ExpressLRS开源团队发布了正式固件版本3.5.1，请注意需要把接收机固件都升级到3.5.1，以确保和发射机版本匹配。

在遥控器上打开ExpressLRS选择Packet rate，以下是对应关系：
· 50Hz-500Hz，为2.4Ghz模式，可以直接对频任何ExpressLRS 2.4GHz接收机。

DK250/DK500/K1000，这是LR1121版本接收机独有的FSK高速率模式，是ExpressLRS 3.5的最新功能，在这里可以查询并了解这个模式：https://github.com/ExpressLRS/ExpressLRS/pull/2832

对频方式

1：关闭发射机
2：对接收机连续通电3次，接收器LED闪烁2次，表示绑定模式。
3：打开遥控器，长按SYS键，在TOOLS菜单下选择ExpressLRS LUA。向下滚动到[Bind]并按确认。
4：接收机上的LED指示灯常亮，表示对频成功。

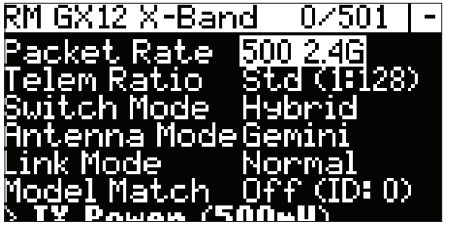

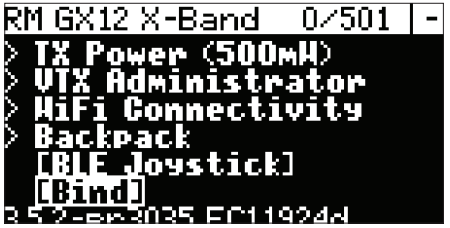

保修及维修

如果您的遥控器硬件出现任何问题，请保留购买证明并与您购买GX12的零售商联系。

也可以登录网站联系官方售后
www.radiomasterrc.com/contact

包装清单

1x GX12 遥控器
1x 便携包
1x 18650 电池盒
2x 肩部组模块
1x Type-C 数据线
1x 屏幕保护膜
1x 1.5mm 六角扳手
4x 硬弹簧
6x 开关孔塞
1x 2段开关
1x 回弹开关
1x RadioMaster 贴纸
1x GX12 说明书