RADIOMASTER T8L

2.4 GHZ

Quick Start Guide

Voltage Range
6.0-8.4V DC

FRONT

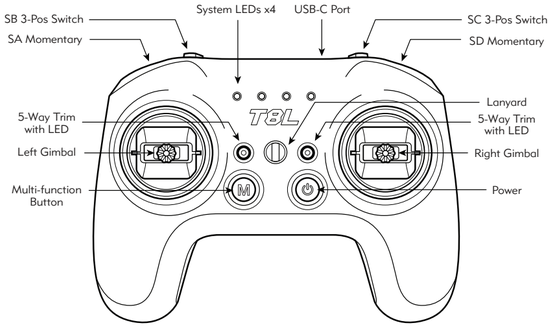

BATTERIES NOT INCLUDED

SPECIFICATIONS

- Item: T8L Radio
- Size: 165*120*70mm
- Weight: 204grams
- Frequency: 2.400GHz-2.480GHz
- RF Module: ExpressLRS
- Transmission power: Max 20dbm (100mW)
- Battery: 3.7v 18650 * 2 (Not included)
- Channels: 10 channels (RX dependent)
- Charging: Built in USB-C Charging
- Upgrade method: Via USB
- Gimbals: High-precision Hall sensor

INTRODUCTION

The RadioMaster T8L is a compact RC transmitter built for pilots seeking reliable performance in a sleek, lightweight design. Focusing on simplicity, accuracy, and portability, the T8L offers the core features of a full-size radio while preserving the trusted speed and dependability of ExpressLRS 2.4GHz. Whether you're starting out or looking for a clean, travel-friendly setup, the T8L is designed to get you airborne quickly.

A clean layout, high-precision Hall gimbals, easy trim control, and support for Web-UI configuration make the T8L a powerful yet simple system. The built-in USB-C charging and simulator compatibility provide added convenience for pilots who value efficiency without sacrificing capability.

-The RadioMaster team

SAFETY INFORMATION

Radio-controlled models commonly contain sharp components like propellers, rotating at high RPM; when operating or maintaining the model, always use common sense and proceed with caution. Always disconnect power to the model AND remove propellers (if applicable) during the assembly or maintenance process.

Never operate the T8L radio system in the following conditions:

- In severe weather or strong windy conditions, such as rain, hail, snow, storms or electromagnetic environments.
- In limited visibility.
- In the proximity of other people, property, high-voltage power lines, public roads, vehicles or animals
- When feeling unwell, or under the influence of drugs or alcohol.
- If the T8L radio system/model is damaged or showing signs of interference.
- In areas with high 2.4GHz interference or where 2.4GHz radios are prohibited.
- When the TX/RX battery is low.
- In areas where local regulations prohibit the use of R/C aircraft.

BATTERIES & CHARGING

T8L is powered by (2x) 3.7V 18650 Lithium-Ion cells and is charged using the built-in USB-C port. The charging circuitry is designed for charging (2x) 3.7V Lithium-Ion batteries only. The nominal voltage is 3.7V and the maximum charging voltage is 4.2V.

DO NOT charge 3.6V LiFe and 3.6V 18650 Lithium Ion packs with the onboard charger. Charging or using the wrong battery chemistry/polarity may cause permanent damage to the PCB and in certain situations cause fires.

Please check the voltage and condition of the battery regularly and never charge unattended. Always charge in a safe area away from combustible materials. Refrain from charging if the remote control gets wet or damaged in any way. **DO NOT** charge with the polarity reversed.

RadioMaster does not assume any responsibility for any adverse consequences caused by the use or misuse of this product.

POWERING ON & OFF

Power-On
- Long-press the Power Button
- The System LEDs will light up in a progress bar style
- Release after a single beep
- Two quick beeps confirm system initialization is complete

⚠ **Tip:** Always ensure the throttle stick is in the lowest position when powering on.

VCP Mode (Configuration)
- Press and hold the Multi Function(M) button and then long-press the Power button
- Used to access USB Web Config mode (VCP)
- Connect to PC/Mac via USB for configuration through the T8L HTML interface

⚠ **Note:** Simulator mode is not available in VCP mode.

Power-Off
- Long-press the Power Button
- The System LEDs will show a reverse progress bar
- Release when the beep sounds

CONNECTING TO THE WEB UI

The T8L Web UI enables configuration of settings through a computer interface, similar to the ExpressLRS Configurator.

Enter VCP Mode:
- Long-press the Power and M (Multi-Function) buttons together to enter VCP Debug Mode.

Connect to Your Computer:
- Use a USB Type-C cable to connect the T8L to your PC or Mac.

Open the Web UI:
- Launch a Chromium-based browser (e.g., Google Chrome or Microsoft Edge).
- Navigate to the T8L Web UI
  https://radiomaster-rc.github.io/RM-Web-Page/Connection.html

Establish Serial Connection:
- Select RadioMaster T8L from the port dropdown list.
- Set baud rate (range: 9600–921600 bps, default: 115200 bps).
- Click Connect.

⚠ **Note:** Ensure a stable USB connection and correct port selection to avoid connection issues.

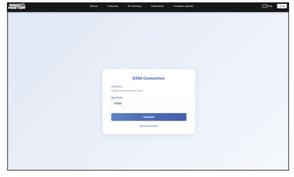

BINDING WITHOUT WEB-UI

- Power on the T8L (two beeps indicate ELRS module readiness).
- Power the receiver on/off three times to enter binding mode (the LED will flash).
- Press and hold the multi-function (M) Button for ~1 second.
- A beep confirms the command.
- The 4 system LEDs flash twice slowly to confirm the binding signal has been sent.

⚠ **Troubleshooting Binding**
If the receiver displays rapid or double flashes without binding, it may require a firmware update. Visit the official ExpressLRS website to update the receiver.

⚠ **Note:** This is a one-way bind signal. The Rx will transition from a flashing LED to a solid ON state to confirm binding.

TRIM FUNCTION

- Trim adjustments are only available after power-on
- Trim allows for fine-tuning of the gimbal centering

When active:
- Trim LED lights up
- The buzzer gives a rising tone

Resetting Trim on the T8L
- Press and hold the Trim button until a beep sounds
- Release to complete trim reset
- Trim LED will turn off

LED INDICATORS

- **System LEDs (x4):** Show power, battery level (25% per LED), calibration, and binding status.
- **Trim LED:** Located behind the translucent trim button, it indicates trim activity or calibration.

MANUAL & FIRMWARE

T8L is pre-installed with custom firmware. To download the latest software manual, please visit the RadioMaster website: **www.radiomasterrc.com**

WARRANTY & REPAIR

If there is any problem with your remote control hardware, please keep the proof of purchase and contact the retailer where you purchased the product.

You may also visit our warranty support page:
www.radiomasterrc.com/contact

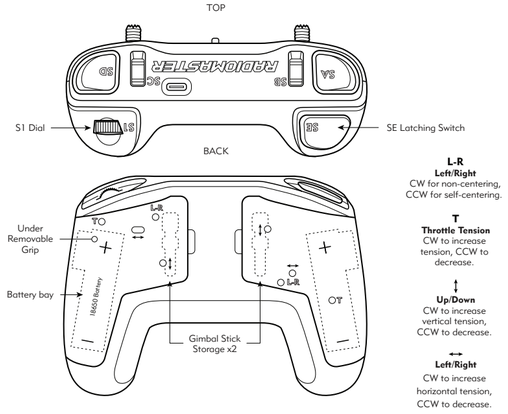

L-R
Left/Right
CW for non-centering, CCW for self-centering.

T
Throttle Tension
CW to increase tension, CCW to decrease.

↕
Up/Down
CW to increase vertical tension, CCW to decrease.

↔
Left/Right
CW to increase horizontal tension, CCW to decrease.

CAUTION

Changes or modifications not expressly approved by the party responsible for compliance could void the user's authority to operate the equipment. This product contains a radio transmitter withwireless technology which has been tested and found to be compliant with the applicable regulations governing a radio transmitter in the 2.400GHz to 2.4835GHz frequency range.

ANTENNA SEPARATION DISTANCE

When operating your RadioMaster transmitter, please be sure to maintain a separation distance of at least 20 cm between your body (excluding fingers, hands, wrists, ankles and feet) and the antenna to meet RF exposure safety requirements as determined by FCC regulations.

RADIOMASTER
WWW.RADIOMASTERRC.COM

EU SIMPLE DECLARATION OF CONFORMITY

RadioMaster declares the radio equipment T8L is in compliance with EU directives Directive 2014/53/EU.

Manufacturer by
ShenZhen RadioMaster Co., Ltd
3F Yang Tian Building, Area 72 Xing Dong community, Xin An Street, Bao An district
Shen Zhen City, Guangdong Province, China

FCC ID: 2BUHG-T8L

FCC Information
This equipment has been tested and found to comply with the limits for Part 15 of the FCC rules. This device complies with part 15 of the FCC rules. Operation is subject to the following two conditions: (1) This device may not cause harmful interference, and (2) this device must accept any interference received, including interference that may cause undesired operation.

Full text of the declaration of conformity is available at:
www.radiomasterrc.com

CE FC A1.4

RADIOMASTER T8L

2.4 GHZ

快速指南

工作电压范围
6.0-8.4V DC

正面视图

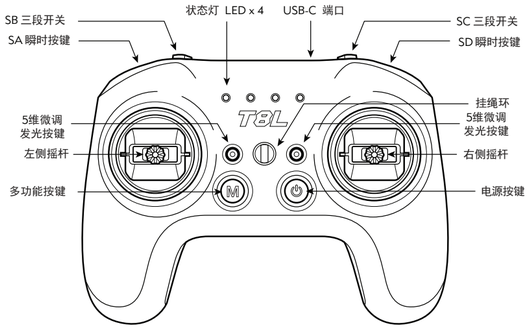

T8L遥控器产品不包含电池

规格说明

· 型号:	T8L 遥控器	· 控制距离:	100m
· 尺寸:	165*120*70mm	· 电池:	3.7v 18650 *2（不含电池）
· 重量:	204g	· 通道:	10 通道(以接收机实际通道数量为准)
· 频率:	2.400GHz-2.480GHz	· 充电:	内置USB-C充电功能
· 射频模块:	ExpressLRS	· 更新方式:	通过USB更新
· 发射功率:	20dbm(100mw)	· 摇杆:	高精度霍尔传感器

简介

RadioMaster T8L是一款紧凑型遥控发射器，专为追求轻量化设计与可靠性能的飞手打造。它聚焦简易操作、精准控制与便携特性，在保留ExpressLRS 2.4GHz稳定高速传输的同时，提供了全尺寸遥控器的核心功能。无论是入门新手还是需要便携旅行装备的玩家，T8L都能助您快速冲上云霄。

简洁的布局设计、高精度霍尔摇杆、便捷微调控件及网页化配置界面，共同构建了这款强大而简单的控制系统。内置Type-C充电接口与模拟器兼容功能，更为注重效率的飞手提供了不妥协性能的便捷体验。

——RadioMaster团队

安全信息

遥控模型通常含有高速旋转的螺旋桨等尖锐部件，操作或维护时务必保持警惕并运用基本判断力。

在组装或维护过程中，必须始终断开模型电源并卸除螺旋桨（若适用）。

严禁在以下情形下操作T8L无线电系统：

· 在恶劣天气或强风条件下，例如雨，冰雹，下雪，暴风雨或电磁环境中。

· 在能见度有限的任何情况下。

· 在可能存在人员、财产、电力高压线、公共道路、有车辆或动物的区域。

· 如果您感到疲倦或不适，或在药物或酒精的影响下。

· 如果遥控器或模型似乎已损坏或无法正常工作。

· 存在严重2.4GHz干扰或禁止使用2.4GHz无线电设备的区域。

· 发射/接收设备电量不足时。

· 当地法规明令禁止使用遥控模型的区域。

电池与充电

T8L采用（2节）3.7V 18650锂离子电池供电，通过内置USB-C端口进行充电。充电电路专为（2节）3.7V锂离子电池设计。标称电压为3.7V，最高充电电压为4.2V。

请勿使用本机充电器为3.6V磷酸铁锂电池和3.6V 18650锂离子电池组充电。错误充电或使用不匹配的电池类型/极性可能导致电路板永久性损坏，甚至在特定情况下引发火灾。

请定期检查电池电压及状态，切勿在无人看管时充电。

务必在远离易燃物的安全区域进行充电。若遥控器受潮或存在任何损坏，请停止充电。严禁反接极性充电。

Radiomaster对因使用或误用本产品所引发的一切不良后果不承担任何责任。

开机与关机

开机
· 长按电源键。
· 系统指示灯将以进度条形式亮起。
· 听到一声提示音后松开。
· 两声快速提示音确认系统初始化完成。

注意：开机时请确保油门摇杆处于最低位置。

VCP模式（配置模式）
· 先按住多功能 (M) 键，再长按电源键。
· 用于进入USB网页配置模式（VCP）。
· 通过USB连接电脑/Mac，使用T8L HTML界面进行配置。

注意：VCP模式下不可使用模拟器功能。

关机
· 长按电源键。
· 系统指示灯将显示反向进度条。
· 听到提示音后松开按键。

连接到网页用户界面（WEB UI）

T8L网页界面支持通过电脑端配置参数，操作逻辑与ExpressLRS配置器类似。

进入VCP模式：
• 长按电源键与M（多功能）键进入VCP调试模式。

连接电脑：
• 使用USB-C数据线将T8L连接至Windows或Mac电脑。

打开网页界面：
•启动Chromium内核浏览器（如谷歌浏览器/微软Edge）。
• 访问T8L网页界面
https://radiomaster-rc.github.io/RM-Web-Page/Connection.html

建立串行连接：
• 从端口下拉菜单选择RadioMaster T8L。
•设置波特率（范围：9600-921600bps，默认：115200bps）。
• 点击连接按钮。

注意：需确保USB连接稳定且端口选择正确，避免出现连接异常。

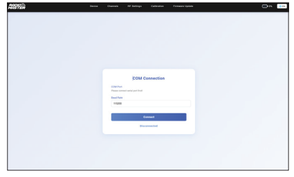

对频方法（无需WEB UI）

• 开启T8L电源（两声提示音表示ExpressLRS模块已就绪）。

• 将接收器电源开关连续通断三次进入对频模式（指示灯将闪烁）。

• 长按多功能 (M) 按钮约1秒。

• 听到提示音确认指令执行。

• 4颗系统指示灯缓慢闪烁两次，确认对频信号已发送。

故障排除：对频问题

若接收器显示快速或双闪但未完成绑定，可能需进行固件更新。请访问ExpressLRS官方网站更新接收器固件。

注意：此为单向绑定信号。接收器指示灯将由闪烁状态转为常亮，即表示绑定成功。

微调功能

• 微调功能仅在开机后可用。
• 微调用于精细校准云台居中位置。

启动时：
• 微调指示灯亮起。
• 蜂鸣器发出升调提示音。

T8L复位微调设置：
• 长按微调键直至听到提示音。
• 松开按键完成复位。
• 微调指示灯将熄灭。

LED指示灯

•系统指示灯（x4）：显示电源状态、电池电量（每颗指示灯代表25%）、校准状态与对频状态。

•微调指示灯：位于半透明微调按键后方，用于指示微调状态或校准进程。

手册与固件

T8L 预装定制固件。如需下载最新软件手册，请访问 RadioMaster 官网：**www.radiomasterrc.com**

保修与维修

若您的遥控器硬件出现任何问题，请保留购买凭证并联系原购买商家。也可以登录网站联系官方售后：**www.radiomasterrc.com/contact**

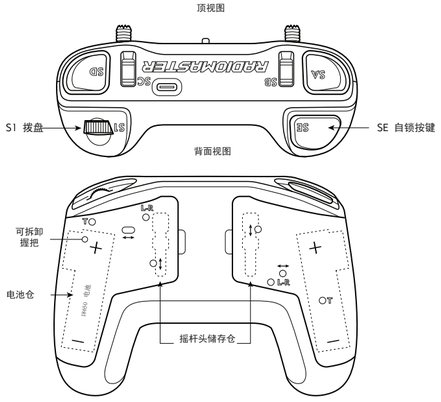

L-R	↔	T	↕
油门切换 顺时针旋转禁用弹簧 逆时针旋转启用弹簧	横向弹力 顺时针旋转增加 逆时针旋转减小	油门阻尼 顺时针旋转增加 逆时针旋转减小	纵向弹力 顺时针旋转增加 逆时针旋转减小

注意

未经合规责任方明确批准的任何更改或修改，可能会导致用户操作设备的权限失效。本产品采用的无线技术射频发射器，经测试符合2.400GHz至2.4835GHz频段无线电发射设备的相关使用规范。

天线间距

使用RadioMaster遥控器时，请确保身体（不包括手指、手部、腕部、脚踝及足部）与天线保持至少20厘米的距离，以符合FCC规定的射频暴露安全要求。

欧盟简易符合性声明

RadioMaster声明无线电设备T8L符合欧盟指令2014/53/EU的要求。

制造商：

深圳RadioMaster有限公司

深圳市宝安区新安街道扬田路扬田大厦3楼

RADIO MASTER

WWW.RADIOMASTERRC.COM