SKU11063

Kakute H743 Wing Manual

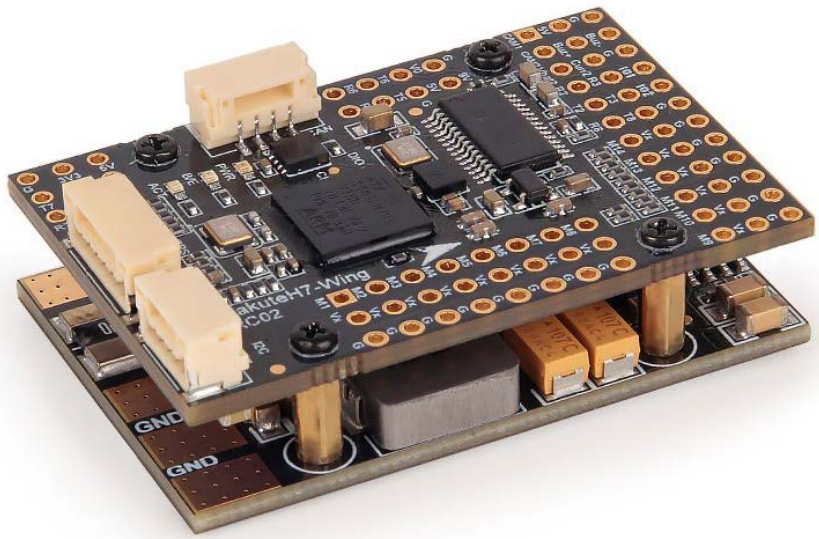

Overview

The Holybro Kakute H743 Wing is a full featured flight controller with layout specifically for fixed wing & VTOL applications. It has the STM32 H743 Processor running at 480 MHz and CAN Bus support, along with dual camera support & switch, ON/OFF Pit Switch, 5V, 6V/8V, 9V/12 BEC, and plug-and-play GPS, CAN, I2C ports.

Features

- STM32H743 MCU running at 480 MHz
- High-Precision / low-noise ICM-42688-P IMU
- CAN Bus Support
- Dual Camera Inputs switch
- 3 On-board BEC output 5V, 6V/8V and 9V/12V
- 9V/12V ON/OFF Pit Switch
- On-board voltage & current sensor
- Integrated BMP280 barometer
- Plug-and-play GPS, CAN, I2C ports
- Small & low-profile design fits into compact frames
- Supports INAV (6.1.1 & later), Ardupilot (4.4 & later)

Holybro KAKUTE H743 WING FLIGHT CONTROLLER

Overview

INAV Target: KAKUTEFH7Wing
ArdupilotTarget: KAKUTEFH7-Wing

Flight Control Board (Top View)

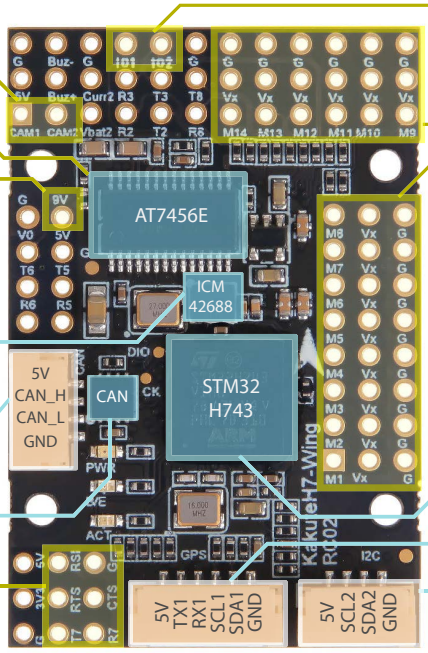

Camera Control
Switchable Dual Camera Inputs

On Screen Display
AT7456E OSD chip, allowing graphical on-screen-display

9V/12V
Default 9V, switchable to 12V via Jumper on Power Board
Also Controlled by ON/OFF Pit Switch via Ardupilot Relay or INAV Modes/User

IMU
high-performance low noise TDK ICM42688 IMU

CAN Port
Easy plug & Play for CAN devices (JST-GH-4P)

CAN Transciever
CAN BUS Support

UART7 with CTS/RTS
Hardware flow control CTS/RTS for reliable data connection (Ardupilot Telem)

GPIO 1 & 2
General Purpose Input/Outputs

PWM Output 1-14
Vx default voltage: 6V
Switchable to 8V via Jumper on Power Board

Barometer
BMP 280, ready for autonomous flight

Full SD Card Slot
Full Micro SD card slot blackbox data logging

H743 MCU
STM32H743 Running at 480 MHz

GPS Port (JST-GH-6P)
Easy plug & play for GPS Module

I2C Port (JST-GH-6P)
Easy plug & Play for I2C Device

Flight Control Board (Bottom View)

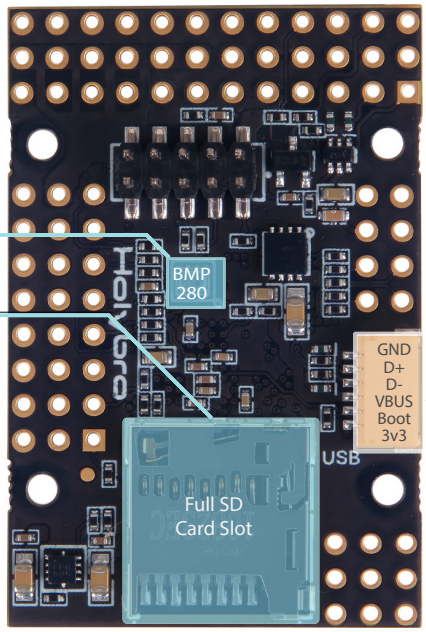

Power Board (Top View)

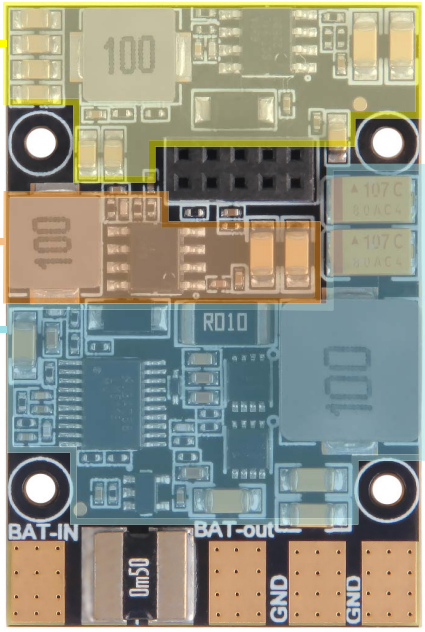

9V/12V Power & VTX On/OFF Switch
Cont. 2 Amps, 3A Burst
Default 9V, switchable to 12V via Jumper on Power Board

ON/OFF Pit Switch controlled via Ardupilot Relay or INAV Modes/User

5V power
Cont. 2 Amps, 3A Peak

Servo Power
Cont. 6 Amps, 8A Burst

Default voltage: 6V
Switchable to 8V via Jumper on Power Board

Power Board (Bottom View)

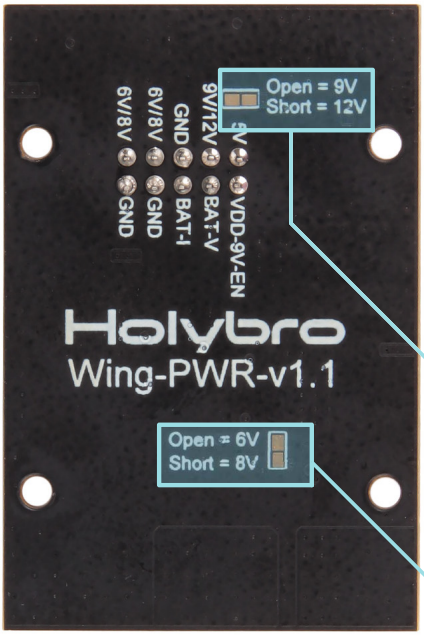

USB Extender Board
Allow extension of USB-C port and onboard DFU Button

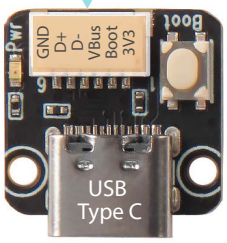

9V/12V Jumper
= 9V (Default)
= 12V (Bridged with solder)

6V/8V Jumper for Vx
Vx = 6V (Default)
Vx = 8V (Bridged with solder)

Mechanical & Electrical Spec:

- **Input Voltage:** 2S - 8S
- **Mounting:** 25.5 x 25.5mm/ 2mm hole
- **Weight:** 28g with USB extender

INAV Camera Switch & ON/OFF Pit Switch

Default no USER1 & USER2 definition, CAM1 & 9V/12V is ON by default,

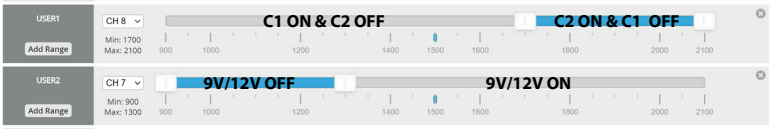

INAV			
Mode			Scale
PC13	USER1	CAM Switch	Voltage Scale: 1800 Current Scale: 275
PE3	USER2	VTX Power Control	
PD4	USER3	IO1 General GPIO1	
PE4	USER4	IO2 General GPIO2	

ArduPilot		
Battery Monitor & Scale		
PC5	BATT_VOLT_PIN	8
	BATT_VOLT_MULT	18.18
PC4	BATT_CURR_PIN	4
	BATT_AMP_PERVLT	36.36
Relay (PINIO)		
PC13	PINIO1 OUTPUT GPIO (81)	CAM Switch
PE3	PINIO2 OUTPUT GPIO (82)	VTX Power Control
PD4	PINIO3 OUTPUT GPIO (83)	IO1 General GPIO1
PE4	PINIO4 OUTPUT GPIO (84)	IO2 General GPIO2

FC Specifications

- MCU: STM32H743VIT6, 480 MHz, 1MB RAM, 2MB Flash
- IMU: ICM-42688P (SPI3)
- Baro: BMP280 (I2C4)
- OSD: AT7456E (SPI2)
- Blackbox: MicroSD card slot on SDMMC2
- 7x Uarts (1,2,3,5,6,7,8) with built-in inversion.
- 14x PWM outputs, 1x CAN, 5x ADC (Bat1/Curr1, Bat2/Curr2 and RSSI)
- 3x I2C (I2C1 and I2C2 for external devices, I2C4 for onboard sensors)
- 3x LEDs for FC STATUS (Blue, Red) and 3.3V indicator (Green)
- USB/DFU Key Extender with USB Type-C
- Dual Camera Inputs switch
- 5V/9V(12V) for Camera/VTX power switch
- High-precision Current Sense (90A continuous, 220A peak)
- Battery Voltage Sensor: 1.5K:25.5K (Scale 1800 in INAV, BATT_VOLT_MULT 18.18 in ArduPilot)
- Static power 160mA@5V

FC Firmware

- ArduPilot: KAKUTEH7-WING (4.4 & later)
- INAV: KAKUTEH7-WING (6.1.1 & later)

PDB

- Input voltage range: 10~36V (3~8S LiPo)
- 1x ESC power pads
- Current Sense: 90A continuous, 220A peak. (Scale 275 in INAV, 36.36 A/V in ArduPilot)

BEC 5V output

- Designed for FC, Receiver, OSD, Camera, 2812 LED Strip, Buzzer, GPS, Air Speed Sensor, etc.
- Output 5.15 +/- 0.1V DC
- Continuous current 2 Amps, 3A Peak

BEC 9V /12V output

- Designed for Video Transmitter, Camera, Gimbal etc.
- Continuous current 2 Amps, 3A Peak
- 12V option with Jumper pad

BEC Vx output

- Designed for Servos
- Voltage adjustable, 6V Default, 8V option with Jumper pad
- Continuous current 6 Amps, 8A Peak

BEC 3.3V output

- Linear Regulator
- Continuous current: 200mA

Mechanical

- Mounting: 25 x 25mm, M2 hole
- Dimensions: 45x 30 x 13.5 mm
- Weight: 28g with USB extender

Kakute H743 Wing - Sample Wiring Diagram

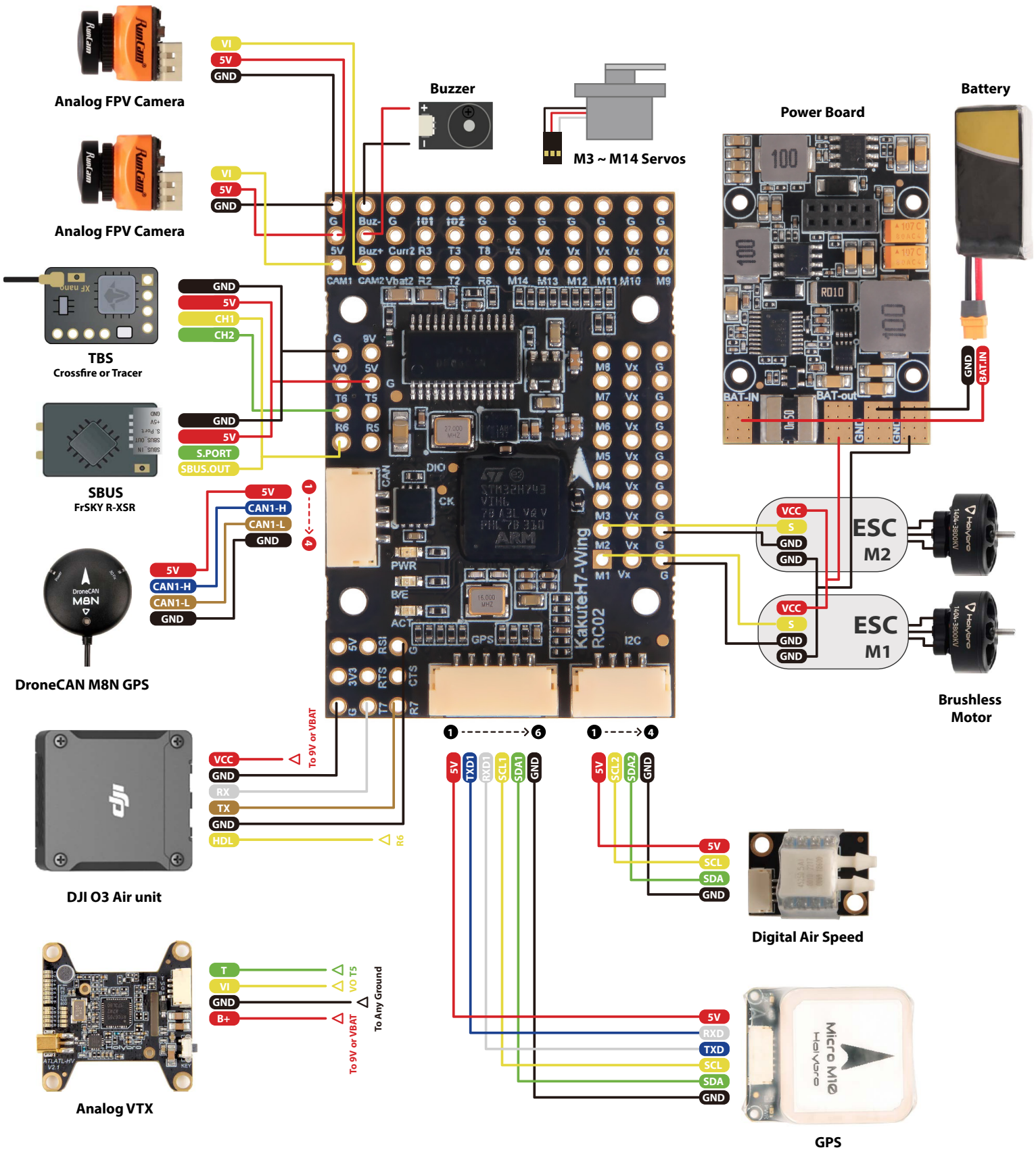

Holybro

rev 1.0

Pinout Diagram

➢ *FC Board*

Top of board

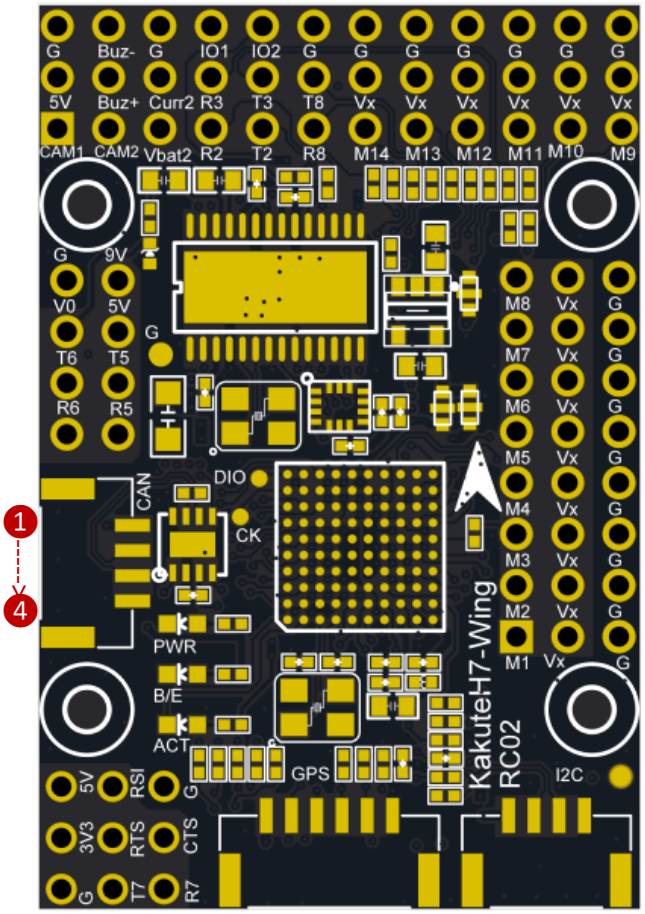

❶----------> ❻ ❶----> ❹

Pin	Function
9V	Video transmitter positive voltage - 9V/2A (Switchable to 12V by jumper)
Vx	Servo power output – 6V/6A (Switchable to 8V by jumper)
5v	5v output (2A)
3v3	3.3v output (0.25A)
IO1/IO2	PINIO1 and PINIO2
Vbat2	Battery2 Voltage Sense input (10~36V)
Curr2	Battery2 Current Sense input (0~3.3V)
Vo	Video output to video transmitter
CAM1/CAM2	Video input from FPV camera1/2
G or GND	Ground
RSI	Analog RSSI (0-3.3v) input from receiver
R2, T2	UART2 RX and TX
R3, T3	UART3 RX and TX
R5, T5	UART5 RX and TX
R6, T6	UART6 RX and TX
R7, T7	UART7 RX and TX
CTS, RTS	CTS, RTS for UART7
R8, T8	UART8 RX and TX
Buz+/Buz-	Piezo buzzer positive/negative leg
M1~M14	PWM1~PWM14 signal outputs

CAN Port (4Pin JST-GH)		
Pin	Pin name	Function
1	5V	+5V voltage output (1A Max)
2	H	CAN1_H
3	L	CAN1_L
4	Gnd	Ground

I2C Port (4Pin JST-GH)		
Pin	Pin name	Function
1	5V	+5V voltage output (1A Max)
2	SCL	I2C2_SCL
3	SDA	I2C2_SDA
4	Gnd	Ground

GPS Port (6Pin JST-GH)		
Pin	**Pin name**	**Function**
1	5V	+5V voltage output (1A Max)
2	TXD	UART1_TXD
3	RXD	UART1_RXD
4	SCL	I2C1_SCL
5	SDA	I2C1_SDA
6	Gnd	Ground

Bottom of Board

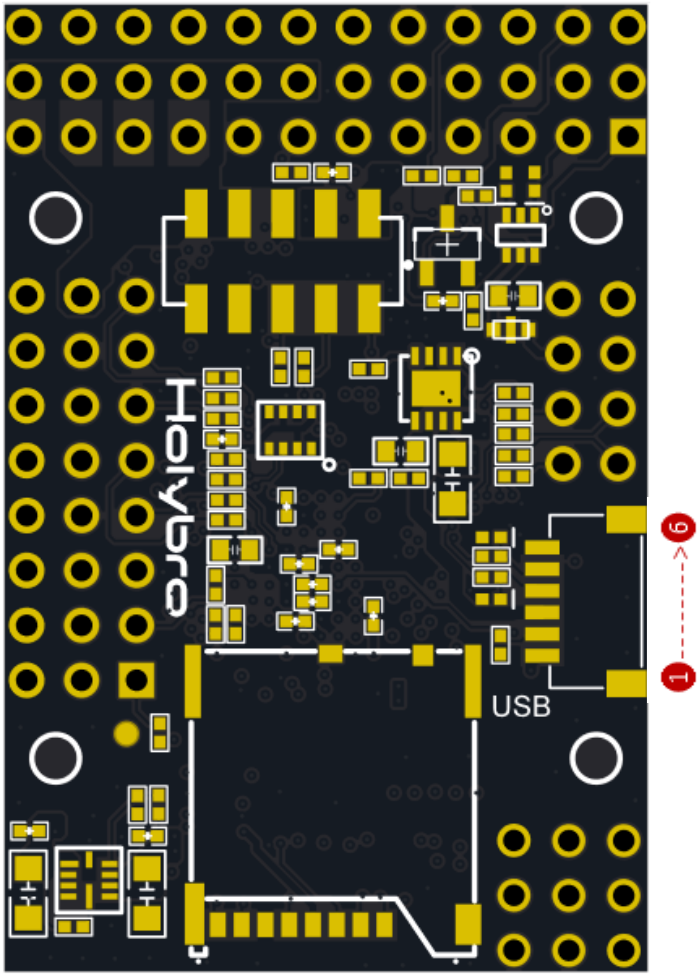

USB Port (6Pin JST-SH)		
Pin	**Pin name**	**Function**
1	3v3	3.3v output (0.25A max)
2	Boot	DFU Boot signal input
3	VBUS	5V USB VBUS input
4	D-	USB data-
5	D+	USB data+
6	Gnd	Ground

➢ *Power Board*

Power Board Top

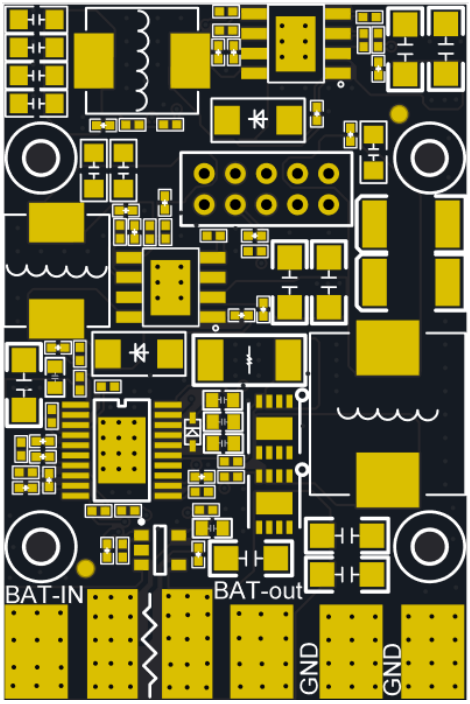

Power Board Bottom

Pin	Function
BAT-IN	Connect to Battery positive
BAT-OUT	Connect to ESC positive
GND	Ground
Servo Power jumper	Open =6V(Default) Shorted =8V
VTX Power jumper	Open =9V(Default) Shorted =12V

➢ *USB Extend Board*

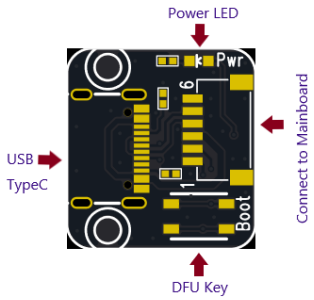

ArduPilot Mapping						
PWM	M1	PA8	5 V tolerant I/O	PWM1 GPIO50	TIM1_CH1	Group1
	M2	PE11	5 V tolerant I/O	PWM2 GPIO51	TIM1_CH2	Group1
	M3	PE13	5 V tolerant I/O	PWM3 GPIO52	TIM1_CH3	Group1
	M4	PE14	5 V tolerant I/O	PWM4 GPIO53	TIM1_CH4	Group1
	M5	PD14	5 V tolerant I/O	PWM5 GPIO54	TIM4_CH3	Group2
	M6	PD15	5 V tolerant I/O	PWM6 GPIO55	TIM4_CH4	Group2
	M7	PA0	5 V tolerant I/O	PWM7 GPIO56	TIM5_CH1	Group3
	M8	PA1	5 V tolerant I/O	PWM8 GPIO57	TIM5_CH2	Group3
	M9	PE5	5 V tolerant I/O	PWM9 GPIO58	TIM15_CH1	Group4
	M10	PE6	5 V tolerant I/O	PWM10 GPIO59	TIM15_CH2	Group4
	M11	PB5	5 V tolerant I/O	PWM11 GPIO60	TIM3_CH2	Group5
	M12	PB0	5 V tolerant I/O	PWM12 GPIO61	TIM3_CH3	Group5
	M13	PB1	3.3 V tolerant I/O	PWM13 GPIO62	TIM3_CH4	Group5
	M14	PA15	5 V tolerant I/O	PWM14 GPIO63	TIM2_CH1	Group6
PWM1~PWM13 are Dshot and PWM capable. However, mixing Dshot and normal PWM operation for outputs is restricted into groups, ie. enabling Dshot for an output in a group requires that ALL outputs in that group be configured and used as Dshot, rather than PWM outputs.						
If servo and motor are mixed in same group, make sure this group run lowest PWM frequency according to the servo specification. ie. Servo supports Max. 50Hz, ESC must run at 50Hz in this group.						
ADC	Vbat1 Pad 1.5K:25.5K	PC5	0~36V	Vbat ADC onboard battery voltage sense	BATT_VOLT_PIN: BATT_VOLT_MULT:	8 18.18
	Current1 Pad	PC4	0~3.3V	Current ADC onboard current sense	BATT_CURR_PIN: BATT_AMP_PERVLT:	4 36.36
	RSSI Pad	PC0	0~3.3V	RSSI ADC Analog RSSI	RSSI_ANA_PIN: RSSI_TYPE:	10 1
	Vbat2 Pad 1.5K:25.5K	PA3	0~36V	Vbat2 ADC	BATT2_VOLT_PIN: BATT2_VOLT_MULT:	15 18.18
	Current 2 Pad	PA2	0~3.3V	Current2 ADC	BATT2_CURR_PIN: BATT2_AMP_PERVL:	14 N/A
I2C	I2C1 CL1/DA1 (GPS Port)	PB8/PB7	5 V tolerant I/O	Compass	QMC5883 / HMC5883 / MAG3110 / LIS3MDL/ etc	-
	I2C2 CL2/DA2 (I2C Port)	PB10/PB11	5 V tolerant I/O	Digital Airspeed sensor I2C	ARSPD_BUS	2
	I2C4	PD12/13	5 V tolerant I/O	Onboard Barometer	BMP280	-
CAN	CAN1	PD0/PD1	5 V tolerant I/O	CAN Node	CAN_D1_PROTOCOL	1
				CAN Node	CAN_P1_DRIVER	1
				CAN GPS	GPS_TYPE	9
				CAN Compass	COMPASS_TYPEMASK	-
				CAN Airspeed sensor	ARSPD_TYPE	8
UART	USB	PA11/PA12	5 V tolerant I/O	USB	console	SERIAL0
	RX7 TX7 RTS7 CTS7	PE7/8/9/10	3.3 V tolerant I/O	UART7	telem1	SERIAL1
	TX2 RX2	PD5/PD6	5 V tolerant I/O	UART2	telem2	SERIAL2
	TX1 RX1	PB6/PA10	5 V tolerant I/O	UART1	GPS1	SERIAL3
	TX3 RX3	PD8/PD9	5 V tolerant I/O	UASRT3	GPS2	SERIAL4
	TX5 RX5	PB13/PD2	5 V tolerant I/O	USART5	USER	SERIAL5
	TX6 TX6	PC6/PC7	5 V tolerant I/O	USART6	RC input/Receiver CRSF/SBUS/IBUS/DSM/PPM/FPORT/SRXL2/FPORT/SRXL2, etc	SERIAL6
	TX8 RX8	PE1/PE0	5 V tolerant I/O	UART8	User	SERIAL8

INAV Mapping					
PWM	M1	PA8	5 V tolerant I/O	TIM1, CH1	Fixed Wing Motor
	M2	PE11	5 V tolerant I/O	TIM1, CH2	
	M3	PE13	5 V tolerant I/O	TIM1, CH3	Fixed Wing Servo
	M4	PE14	5 V tolerant I/O	TIM1, CH4	
	M5	PD14	5 V tolerant I/O	TIM4, CH3	
	M6*	PD15	5 V tolerant I/O	TIM4, CH4	
	M7	PA0	5 V tolerant I/O	TIM5, CH1	
	M8	PA1	5 V tolerant I/O	TIM5, CH2	
	M9	PE5	5 V tolerant I/O	TIM15,CH1	
	M10*	PE6	5 V tolerant I/O	TIM15,CH2	
	M11	PB5	5 V tolerant I/O	TIM3, CH2	
	M12	PB0	5 V tolerant I/O	TIM3, CH3	
	M13	PB1	3.3 V tolerant I/O	TIM3, CH4	
	M14	PA15	5 V tolerant I/O	TIM2, CH1	LED_2812
* M6 M10 Does not support Dshot					
ADC	Vbat1 1.5K:25.5K	PC5	0~36V	Vbat ADC ADC_CHANNEL_1	scale 1800
	Current1	PC4	0~3.3V	Current ADC ADC_CHANNEL_2	scale 275
	RSSI Pad	PC0	0~3.3V	RSSI ADC ADC_CHANNEL_3	Analog RSSI
	Vbat2 Pad 1.5K:25.5K	PA3	0~36V	Vbat2 ADC ADC_CHANNEL_4	scale 1800
	Current 2 Pad	PA2	0~3.3V	Current2 ADC ADC_CHANNEL_5	Spare
I2C	I2C1 - CL1/DA1 (GPS Port)	PB8/PB7	5 V tolerant I/O	Compass	QMC5883 / HMC5883 / MAG3110 / LIS3MDL/ etc
	I2C2 - CL2/DA2 (I2C Port)	PB10/PB11	5 V tolerant I/O	Digital Airspeed sensor/ Temperature sensor/ etc.	-
	I2C4	PD12/13	5 V tolerant I/O	Onboard Barometer	BMP280
UART	USB	PA11/PA12	5 V tolerant I/O	USB	
	TX1 RX1	PB6/PA10	5 V tolerant I/O	UART1	GPS1
	TX2 RX2	PD5/PD6	5 V tolerant I/O	UART2	-
	TX3 RX3	PD8/PD9	5 V tolerant I/O	USART3	-
	TX5 RX5	PB13/PD2	5 V tolerant I/O	UART5	-
	TX6 RX6	PC6/PC7	5 V tolerant I/O	USART6	RC input/Receiver CRSF/SBUS/IBUS/DSM/PPM/FPORT/SRXL2 etc.
	RX7 TX7	PE8/PE7	3.3 V tolerant I/O	UART7	-
	TX8 RX8	PE1/PE0	5 V tolerant I/O	UART8	-