A2 mini

ULTRA WIDE ANGLE FPV GIMBAL USER MANUAL

V1.0

Dec 2022

2022 SIYI Technology Copyright

Thank you for purchasing SIYI product.

A2 mini is a lightweight and ultra-wide-angle FPV gimbal, built with IP67 protection, the 160-degree FOV makes as wide angle as human eye. A2 mini's ethernet output feature are compatible with both SIYI link and third-party link to be widely used for agriculture spraying drones. The upside-down mode makes it also a great option for UGV, USV, robotics, RC hobby planes and FPV drones.

To ensure you a good experience of the product, please read this manual carefully. If you encounter any issue using the product, please consult the manual or check the online pages of this product on SIYI official store (https://shop.siyi.biz). You can also write an email to SIYI official A/S center (support@siyi.biz).

2022 SIYI Technology Copyright

SIYI User Group - Facebook

SIYI Official Store (*https://shop.siyi.biz*)

SIYI Official AliExpress Store (*https://siyi.aliexpress.com*)

SIYI YouTube Channel (*https://www.youtube.com/c/SIYITech*)

2022 SIYI Technology Copyright

CONTENT

READ TIPS 1
Icons 1
Safety 1
Storage/Carrying/Recycling 2
1 INTRODUCTION 3
1.1 Product Features 3
1.2 Parts 5
1.2.1 At a Glance 5
1.2.2 Connector and Pinouts 6
1.3 Technical Specification 7
1.4 Packing List 8
2 GET READY TO USE A2 MINI 9
2.1 Installation 9
3 GIMBAL CONTROL 10
3.1 Control Gimbal through SIYI FPV App on MK32 / MK15 Ground Station 10
3.1.1 Preparation 10
3.1.2 Gimbal Pitch Rotation 11
3.2 Control Gimbal Camera through S.Bus Signal (Taking an Example of MK15) 12
3.3 UDP Control (through SDK) 14
3.3.1 SDK Protocol Format 14
3.3.2 SDK Communication Commands 15
3.3.3 ZR10 SDK Communication Interface 21
3.3.4 ZR10 SDK Communication Code Examples 21
3.3.5 SDK CRC16 Code 24
4 VIDEO OUTPUT 27
4.1 Output and Display Video Stream on MK15 Smart Controller 27
4.2 Output Video Stream through HM30 Image Transmission System 27
4.3 Output Video Stream to Third-Party Image Transmission Systems 28
4.4 Solutions to No Image 29
4.4.1 Video Output to Android Device 30
4.4.2 Video Output to Windows Device 31

2022 SIYI Technology Copyright

4.5 Common IP Addresses 33
5 SIYI FPV APP 34
5.1 Settings 36
5.2 Link Status 36
5.3 Gimbal Camera 37
5.4 About SIYI FPV 40
6 After-sale Service 41
6.1 Repair Service 41
6.2 Warranty 42
6.2.1 7-Day Return & Refund 42
6.2.2 15-Day Replacement 43
6.2.3 1-Year Warranty Repair 45

2022 SIYI Technology Copyright

READ TIPS

Icons

Please pay more attention to content indicated with the following marks:

DANGER Dangerous manipulation probably leads to human injuries.

WARNING Warnings on manipulation possibly leads to human injuries.

CAUTION Cautions on what manipulation may lead to property loss.

Prohibited **Mandatory** **Mark**

Safety

A2 mini ultra-wide-angle FPV gimbal is designed for professional application in specific scenes, which has been done necessary configuration before delivery, it is forbidden to disassemble the gimbal or to change its mechanical structure. And don't add more payload to the gimbal other than its own camera. Gimbal camera is designed with very precise structure, users who approach to the equipment should have the basic knowledge of how to operate it. Irregular or irresponsible manipulations to the device may cause damage, property loss, or human injuries, and SIYI Technology is not obliged to any of the damage, loss, or injury. It is prohibited to use SIYI products for military purpose. Users under 14 years' old

2022 SIYI Technology Co., Ltd, All Rights Reserved

should follow an experienced trainer's guide. Disassembling or modification to the system is prohibited without permission from its manufacturer, SIYI Technology.

Storage/Carrying/Recycling

When your SIYI products are stand idle, or you are bringing it outdoors, or the system reached service life, then please do read the precautions below.

⚠ CAUTION

Always place your SIYI products at places where babies or kids do not reach.

⚠ DANGER

SIYI products should be placed in places with below conditions:

Not too hot (above 60°C) or too cold (under -20°C).

Not under direct sunshine or too dusty or too wet.

Not on an unstable holder which lacks solid supports or may cause vibration.

Not nearby steam or other heat sources.

2022 SIYI Technology Co., Ltd, All Rights Reserved

1 INTRODUCTION

1.1 Product Features

Ultra-Wide Angle FOV, Distortion Correction

A2 mini comes with a horizontal 160-degree ultra-wide-angle lens, providing an extensive view of the operation field that operator has clear sight during flight without adjusting drone attitude too much. Quick decisions can be made to ensure security to drone operation.

Powerful distortion correction algorithm makes A2 mini's image smooth and natural.

**SIYI FPV app is suggested for checking FPV image and SDK is available for developers and manufacturers.*

1080P Full HD Starlight FPV

A2 mini FPV gimbal's ultra-sensitive starlight CMOS can keep image bright even in low light environment.

Upside Down Mode

A2 mini FPV gimbal automatically activates upside down mode when it is placed upside down, very convenient to be mounted on multiple kinds of vehicles like UGV, USV, robot dog, and robotics.

Gimbal Stabilizing Control Algorithms

A2 mini FPV gimbal is applied with industry-level stabilizing technology and high-

2022 SIYI Technology Co., Ltd, All Rights Reserved

precision FOC control algorithms. Operator can control the tilt angle.

2022 SIYI Technology Co., Ltd, All Rights Reserved

1.2 Parts

1.2.1 At a Glance

2022 SIYI Technology Co., Ltd, All Rights Reserved

1.2.2 Connector and Pinouts

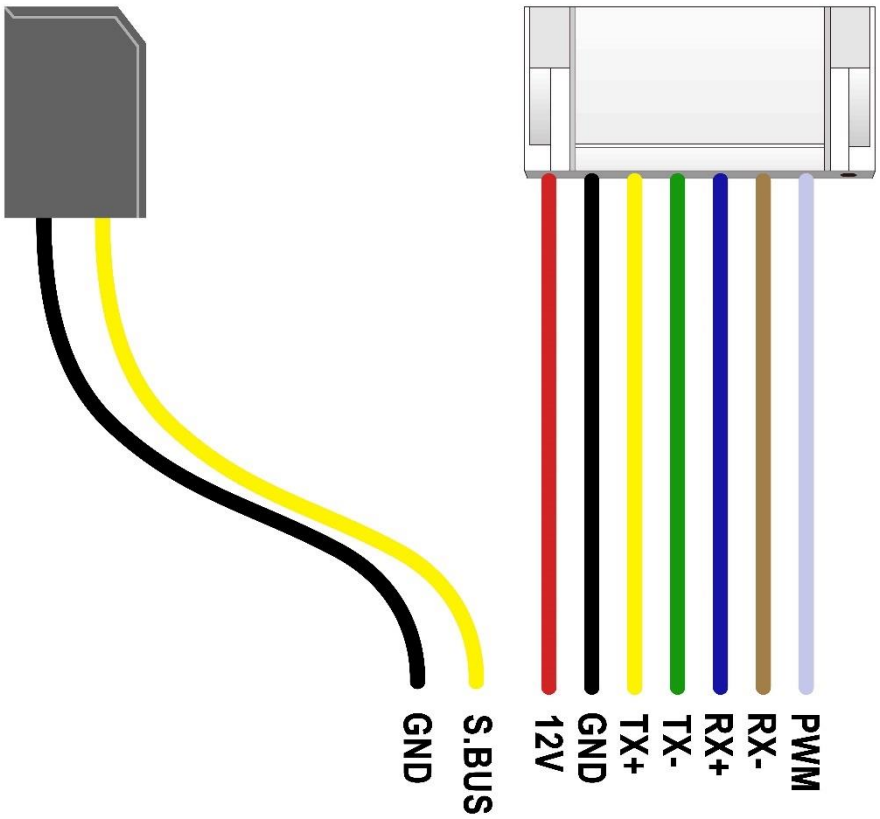

2022 SIYI Technology Co., Ltd, All Rights Reserved

1.3 Technical Specification

Overall

Video Output Port	Ethernet
Control Signal Input Port	S.Bus / PWM
Working Voltage	12 V
Power Consumption	Summit 12 W
Working Temperature	-10 ~ 50 ℃
Dimension	65 x 43 x 50 mm
Weight	Approx. 85 g

Gimbal

Controllable Pitch Angle	-90° ~ +25°

Camera

Image Sensor	1/2.7-inch, 2 MP effective resolution
FOV	Horizontal 160°

2022 SIYI Technology Co., Ltd, All Rights Reserved

1.4 Packing List

1 x A2 mini Gimbal

6 x Hex Socket Cap Screw M2.5*6

10 x Cross Recessed Flat Head Screw M2.5*10

8 x M2.5 Nut Black

2022 SIYI Technology Co., Ltd, All Rights Reserved

2 GET READY TO USE A2 MINI

2.1 Installation

Screw Holes' Position and Distance

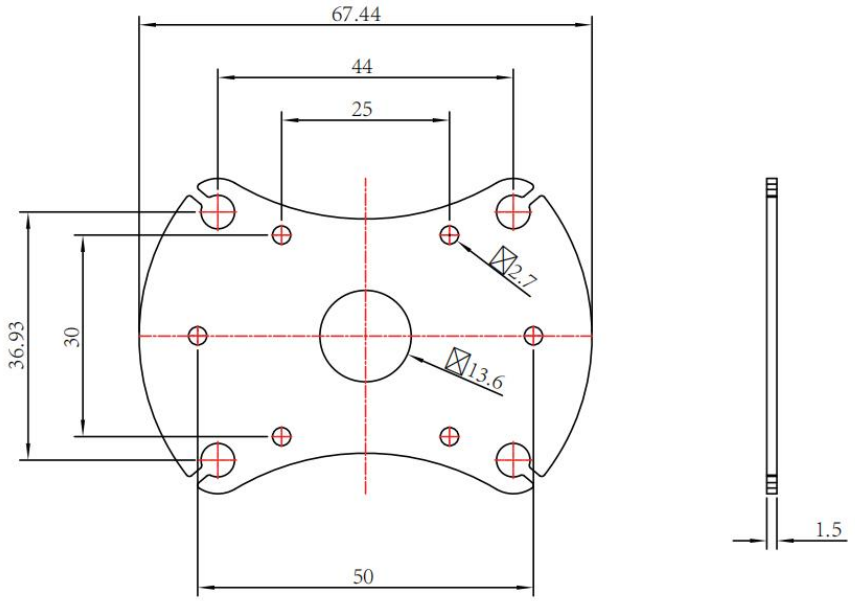

Mark

Welcome to contact SIYI to get the 3D file for pre-installation.

2022 SIYI Technology Co., Ltd, All Rights Reserved

3 GIMBAL CONTROL

A2 mini gimbal supports multiple methods to control.

3.1 Control Gimbal through SIYI FPV App on MK32 / MK15 Ground Station

Gimbal can connect to air unit directly, then you can control gimbal rotation and display video in SIYI FPV app on screen after binding the remote controller with the air unit.

3.1.1 Preparation

It is necessary to prepare the tools, firmware, and software below before controlling gimbal camera in this way.

- MK32 / MK15 Handheld Ground Station (MK32 / MK15 standard combo is suggested for using conveniently with A2 mini gimbal)
- A2 mini Gimbal

Mark

Above products can be purchased from SIYI directly or from SIYI authorized dealers.

2022 SIYI Technology Co., Ltd, All Rights Reserved

- SIYI FPV App (v2.5.8.498 or latest version)

Mark

Above software can be downloaded from relevant product page on SIYI official website.

Steps

1. Power air unit and bind it with ground station.
2. Connect A2 mini gimbal to the air unit's video port.
3. Update SIYI FPV app to the latest version.
4. Run SIYI FPV app, go to "Settings – Camera A2 mini", and select "SIYI Camera 1" (when IP addresses are 192.168.144.25), video stream will display. Gimbal motion can be controlled by ground station touchscreen.

3.1.2 Gimbal Pitch Rotation.

While SIYI FPV App is running, sliding on touchscreen up and down can control gimbal pitch rotation.

Double tap touchscreen, gimbal will automatically center.

Mark

Slide on touchscreen and hold it, gimbal will continue rotating till it reaches physical limit. Farther that you hold it from the center of the screen, faster the gimbal rotates.

2022 SIYI Technology Co., Ltd, All Rights Reserved

3.2 Control Gimbal Camera through S.Bus Signal (Taking an Example of MK15)

A2 mini can be connected to MK15 air unit for gimbal control through joysticks, dials, switches, and buttons on MK15 remote controller when it is communicating to the air unit.

It is necessary to prepare the below tools, firmware, and software before controlling gimbal camera in this way.

- MK15 Mini HD Handheld Smart Controller
- A2 mini Gimbal

Mark

Above products can be purchased from SIYI directly or from SIYI authorized dealers.

- SIYI TX App (v1.1.228 or latest version)

Mark

Above app can be downloaded from relevant product page on SIYI official website.

Steps

1. Power the air unit and bind it with the remote controller.

2022 SIYI Technology Co., Ltd, All Rights Reserved

2. Connect A2 mini gimbal to the air unit's video port and the S.Bus port.
3. Run SIYI TX app on the remote controller.
4. Go to "System Settings – Channel 15" and switch the control of channel 15 to the gimbal for pitch control of A2 mini gimbal.

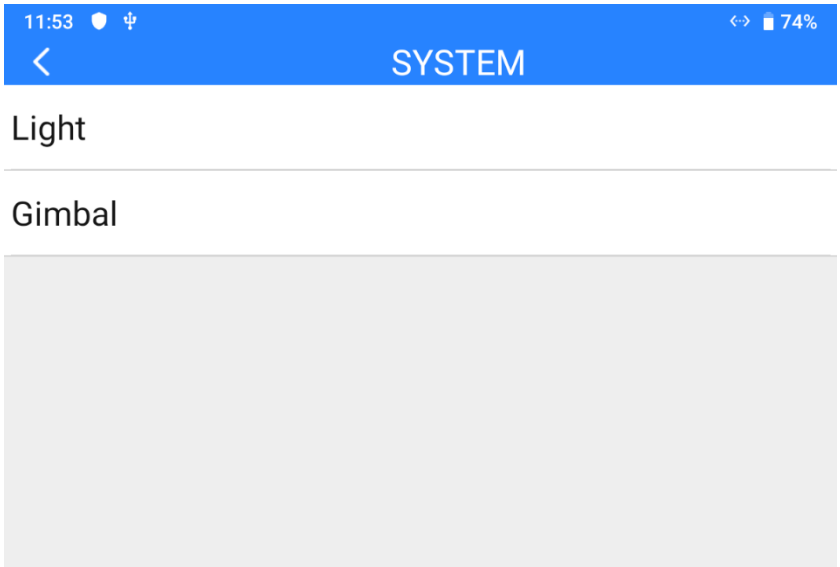

5. Go to "Channel Settings" and assign a joystick, a dial, a switch, or a button to channel 15.

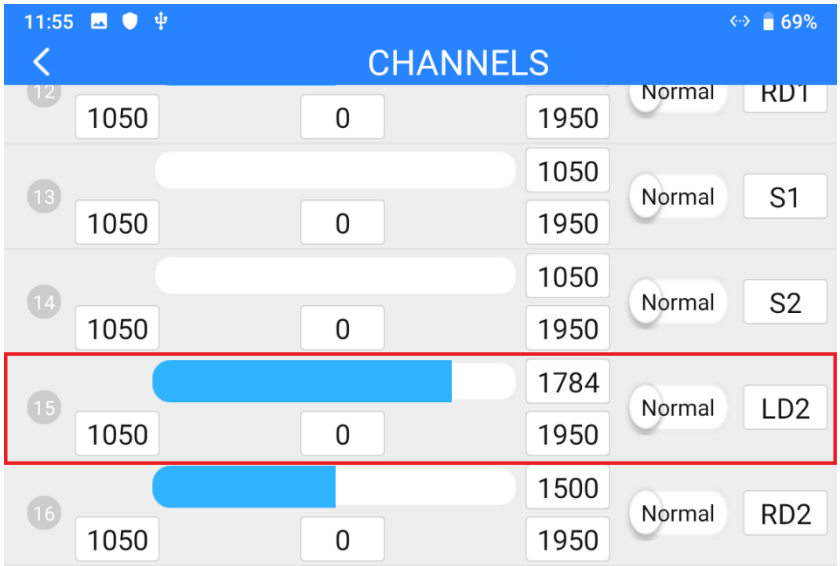

6. For the assigned channel, operate the relevant joystick, dial, switch, or button to confirm if it is working normally.

2022 SIYI Technology Co., Ltd, All Rights Reserved

3.3 UDP Control (through SDK)

A2 mini gimbal camera provides control protocol for all customers, please refer to the below file “SIYI Gimbal Camera SDK Communication Protocol” for secondary development.

Mark

A2 mini gimbal only support pitch axis control.

3.3.1 SDK Protocol Format

Field	Index	Bytes	Description
STX	0	2	0x6655: starting mark Low byte in the front
CTRL	2	1	0: need_ack (if the current data pack need “ack”) 1: ack_pack (if the current data pack is an “ack” package) 2-7: reserved
Data_len	3	2	Date field byte length Low byte in the front
SEQ	5	2	Frame sequence (0 ~ 65535) Low byte in the front
CMD_ID	7	1	Command ID
DATA	8	Data_len	Data
CRC16		2	CRC16 check to the complete data package. Low byte in the front

2022 SIYI Technology Co., Ltd, All Rights Reserved

3.3.2 SDK Communication Commands

Acquire Firmware Version

CMD_ID:0x01------Acquire Firmware Version			
Send data format			
No.	Data Type	Data Name	Description
ACK data format			
	uint32_t	code_board_ver	Camera firmware version
	uint32_t	gimbal_firmware_ver	Gimbal firmware version
	uint32_t	zoom_firmware_ver	Zoom firmware version

Eg：0x6E030203 --> firmware version v3.2.3

Mark:

1. Ignore the 4th byte (higher byte)
2. Zoom firmware version is only available for ZR10 at this moment.

Acquire Hardware ID

CMD_ID:0x02------ Hardware ID			
Send data format			
No.	Data Type	Data Name	Description
ACK data format			
	Uint8_t	hardware_id[12]	Hardware ID character string (10 digits)

2022 SIYI Technology Co., Ltd, All Rights Reserved

Auto Focus

CMD_ID:0x04------Auto Focus			
Send data format			
No.	Data Type	Data Name	Description
1	uint8_t	auto_focus	1: Start auto focus for once
ACK data format			
1	uint8_t	sta	1: Success 0: Fail

Manual Zoom and Auto Focus

CMD_ID:0x05------Manual Zoom and Auto Focus			
Send data format			
No.	Data Type	Data Name	Data Description
1	int8_t	zoom	1: Start zooming in 0: Stop zooming in / out (send when released from control command) -1: Start zooming out
ACK data format			
	uint16_t	zoom_multiple	Current (hybrid) zoom multiples, (zoom_multiple / 10, accurate to one decimal point)

2022 SIYI Technology Co., Ltd, All Rights Reserved

Manual Focus

CMD_ID:0x06------Manual Focus			
Send data format			
No.	Data Type	Data Name	Description
1	int8_t	focus	1: Long shot 0: Stop manual focus (send when released from control command) -1: Close shot
ACK data format			
	uint8_t	sta	1: Success 0: Fail

Mark:

Only available on ZR10 at this moment.

Gimbal Rotation

CMD_ID:0x07------Gimbal Rotation			
Send data format			
No.	Date Type	Date Name	Description
1	int8_t	turn_yaw	-100~0~100: Negative and positive represent two directions, higher or lower the number is away from 0, faster the rotation speed is. Send 0 when released from control command and gimbal stops rotation.
2	int8_t	turn_pitch	-100~0~100: Same as above
ACK data format			
	uint8_t	sta	1: Success

2022 SIYI Technology Co., Ltd, All Rights Reserved

			0: Fail

Center

CMD_ID:0x08------Center			
Send data format			
No.	Data Type	Data Name	Description
1	uint8_t	center_pos	1: gimbal centers to position 0
ACK data format			
1	uint8_t	sta	1: Success 0: Fail

Acquire Gimbal Configuration Information

CMD_ID:0x0A------Acquire Gimbal Configuration Information			
Send data format			
No.	Data Type	Data Name	Description
ACK data format			
1	uint8_t	reserved	
2	uint8_t	hdr_sta	0: HDR OFF 1: HDR ON
3	uint8_t	reserved	
4	uint8_t	record_sta	0: Recording OFF 1: Recording ON 2: TF card slot is empty 3: (Recording) Data loss in TF card recorded video, please check TF card
5	uint8_t	gimbal_motion_mode	0: Lock Mode 1: Follow Mode

2022 SIYI Technology Co., Ltd, All Rights Reserved

			2: FPV Mode
6	uint8_t	gimbal_mounting_dir	Gimbal Mounting Method 0: Reserved 1: Normal 2: Upside Down
7	uint8_t	video_hdmi_or_cvbs	(Only available on A8 mini) Video output status of HDMI and CVBS: 0: HDMI output ON CVBS output OFF 1: HDMI output OFF CVBS output ON

Function Feedback Information

CMD_ID:0x0B------Function Feedback Information			
Send data format			
No.	Data Type	Data Name	Description
ACK data format			
1	uint8_t	info_type	0: Success 1: Fail to take a photo (Please check if TF card is inserted) 2: HDR ON 3: HDR OFF 4: Fail to record a video (Please check if TF card is inserted)

2022 SIYI Technology Co., Ltd, All Rights Reserved

Photo and Video

CMD_ID:0x0C------Photo			
Send data format			
No.	Data Type	Data Name	Description
	uint8_t	func_type	0: Take a picture 1: Switch on / off HDR (not supported yet) 2: Start / Stop Recording 3: Motion – Lock Mode 4: Motion – Follow Mode 5: Motion – FPV Mode 6: Set video output as HDMI (Only available on A8 mini, restart gimbal to take effect) 7: Set video output as CVBS (Only available on A8 mini, restart gimbal to take effect) 8: Turn off both HDMI and CVBS video output (Only available on A8 mini, restart gimbal to take effect)
ACK data format			
			No ack

Acquire Gimbal Attitude

CMD_ID:0x0D------Acquire Gimbal Attitude			
Send data format			
No.	Data Type	Data Name	Description

2022 SIYI Technology Co., Ltd, All Rights Reserved

ACK data format			
	int16_t	yaw	Yaw axis degree
	int16_t	pitch	Pitch axis degree
	int16_t	roll	Roll axis degree
	int16_t	yaw_velocity	Yaw axis rotation speed
	int16_t	pitch_velocity	Pitch axis rotation speed
	int16_t	roll_velocity	Roll axis rotation speed

Mark:

The above data to be divided by 10 is the actual degree, accuracy in one decimal place.

3.3.3 ZR10 SDK Communication Interface

TTL Serial Port

- Baud rate: 115200
- Data position: 8 digits. Stop position: 1 digit. No check.

UDP

- IP: 192.168.144.25
- Port Number: 37260

3.3.4 ZR10 SDK Communication Code Examples

Zoom 1

55 66 01 01 00 00 00 05 01 8d 64

2022 SIYI Technology Co., Ltd, All Rights Reserved

Zoom -1

55 66 01 01 00 00 00 05 FF 5c 6a

Manual Focus 1

55 66 01 01 00 00 00 06 01 de 31

Manual Focus -1

55 66 01 01 00 00 00 06 ff 0f 3f

Take Pictures

55 66 01 01 00 00 00 0c 00 34 ce

Record Video

55 66 01 01 00 00 00 0c 02 76 ee

Rotate 100 100

55 66 01 02 00 00 00 07 64 64 3d cf

Auto Centering

55 66 01 01 00 00 00 08 01 d1 12

Gimbal Status Information

55 66 01 00 00 00 00 0a 0f 75

Auto Focus

55 66 01 01 00 00 00 04 01 bc 57

Acquire Hardware ID

55 66 01 00 00 00 00 02 07 f4

2022 SIYI Technology Co., Ltd, All Rights Reserved

Acquire Firmware Version

55 66 01 00 00 00 00 01 64 c4

Lock Mode

55 66 01 01 00 00 00 0c 03 57 fe

Follow Mode

55 66 01 01 00 00 00 0c 04 b0 8e

FPV Mode

55 66 01 01 00 00 00 0c 05 91 9e

Acquire Attitude Data

55 66 01 00 00 00 00 0d e8 05

Set Video Output as HDMI (Only available on A8 mini, restart to take effect)

55 66 01 01 00 00 00 0c 06 f2 ae

Set Video Output as CVBS (Only available on A8 mini, restart to take effect)

55 66 01 01 00 00 00 0c 07 d3 be

Turn Off both CVBS and HDMI Output (Only available on A8 mini, restart to take effect)

55 66 01 01 00 00 00 0c 08 3c 4f

2022 SIYI Technology Co., Ltd, All Rights Reserved

3.3.5 SDK CRC16 Code

```
const uint16_t crc16_tab[256];
/*********************************************************
CRC16 Coding & Decoding G(X) = X^16+X^12+X^5+1
*********************************************************/
uint16_t CRC16_cal(uint8_t *ptr, uint32_t len, uint16_t crc_init)
{
    uint16_t crc,     oldcrc16;
    uint8_t   temp;
    crc = crc_init;
    while (len--!=0)
    {
        temp=(crc>>8)&0xff;
        oldcrc16=crc16_tab[*ptr^temp];
        crc=(crc<<8)^oldcrc16;
        ptr++;

    }
    //crc=~crc;          //??
    return(crc);
}

uint8_t crc_check_16bites(uint8_t* pbuf, uint32_t len,uint32_t* p_result)
{
    uint16_t crc_result = 0;
    crc_result= CRC16_cal(pbuf,len, 0);
    *p_result = crc_result;

    return 2;
```


2022 SIYI Technology Co., Ltd, All Rights Reserved

```
}


const uint16_t crc16_tab[256]= {0x0,0x1021,0x2042,0x3063,0x4084,0x50a5,0x60c6,0x70e7,
                                0x8108,0x9129,0xa14a,0xb16b,0xc18c,0xd1ad,0xe1ce,0xf1ef,
                                0x1231,0x210,0x3273,0x2252,0x52b5,0x4294,0x72f7,0x62d6,
                                0x9339,0x8318,0xb37b,0xa35a,0xd3bd,0xc39c,0xf3ff,0xe3de,
                                0x2462,0x3443,0x420,0x1401,0x64e6,0x74c7,0x44a4,0x5485,
                                0xa56a,0xb54b,0x8528,0x9509,0xe5ee,0xf5cf,0xc5ac,0xd58d,
                                0x3653,0x2672,0x1611,0x630,0x76d7,0x66f6,0x5695,0x46b4,
                                0xb75b,0xa77a,0x9719,0x8738,0xf7df,0xe7fe,0xd79d,0xc7bc,
                                0x48c4,0x58e5,0x6886,0x78a7,0x840,0x1861,0x2802,0x3823,
                                0xc9cc,0xd9ed,0xe98e,0xf9af,0x8948,0x9969,0xa90a,0xb92b,
                                0x5af5,0x4ad4,0x7ab7,0x6a96,0x1a71,0xa50,0x3a33,0x2a12,
                                0xdbfd,0xcbdc,0xfbbf,0xeb9e,0x9b79,0x8b58,0xbb3b,0xab1a,
                                0x6ca6,0x7c87,0x4ce4,0x5cc5,0x2c22,0x3c03,0xc60,0x1c41,
                                0xedae,0xfd8f,0xcdec,0xddcd,0xad2a,0xbd0b,0x8d68,0x9d49,
                                0x7e97,0x6eb6,0x5ed5,0x4ef4,0x3e13,0x2e32,0x1e51,0xe70,
                                0xff9f,0xefbe,0xdfdd,0xcffc,0xbf1b,0xaf3a,0x9f59,0x8f78,
                                0x9188,0x81a9,0xb1ca,0xa1eb,0xd10c,0xc12d,0xf14e,0xe16f,
                                0x1080,0xa1,0x30c2,0x20e3,0x5004,0x4025,0x7046,0x6067,
                                0x83b9,0x9398,0xa3fb,0xb3da,0xc33d,0xd31c,0xe37f,0xf35e,
                                0x2b1,0x1290,0x22f3,0x32d2,0x4235,0x5214,0x6277,0x7256,
                                0xb5ea,0xa5cb,0x95a8,0x8589,0xf56e,0xe54f,0xd52c,0xc50d,
                                0x34e2,0x24c3,0x14a0,0x481,0x7466,0x6447,0x5424,0x4405,
                                0xa7db,0xb7fa,0x8799,0x97b8,0xe75f,0xf77e,0xc71d,0xd73c,
                                0x26d3,0x36f2,0x691,0x16b0,0x6657,0x7676,0x4615,0x5634,
                                0xd94c,0xc96d,0xf90e,0xe92f,0x99c8,0x89e9,0xb98a,0xa9ab,
                                0x5844,0x4865,0x7806,0x6827,0x18c0,0x8e1,0x3882,0x28a3,
                                0xcb7d,0xdb5c,0xeb3f,0xfb1e,0x8bf9,0x9bd8,0xabbb,0xbb9a,
```


2022 SIYI Technology Co., Ltd, All Rights Reserved

```
                    0x4a75,0x5a54,0x6a37,0x7a16,0xaf1,0x1ad0,0x2ab3,0x3a92,
                    0xfd2e,0xed0f,0xdd6c,0xcd4d,0xbdaa,0xad8b,0x9de8,0x8dc9,
                    0x7c26,0x6c07,0x5c64,0x4c45,0x3ca2,0x2c83,0x1ce0,0xcc1,
                    0xef1f,0xff3e,0xcf5d,0xdf7c,0xaf9b,0xbfba,0x8fd9,0x9ff8,
                    0x6e17,0x7e36,0x4e55,0x5e74,0x2e93,0x3eb2,0xed1,0x1ef0

};
```


2022 SIYI Technology Co., Ltd, All Rights Reserved

4 VIDEO OUTPUT

A2 mini gimbal camera can output video through Ethernet port.

4.1 Output and Display Video Stream on MK15 Smart Controller

A2 mini gimbal can connect to MK15 air unit directly, then video will be displayed in SIYI FPV app after binding the air unit to the remote controller. Please refer to Chapter 3.1 in this manual for details.

4.2 Output Video Stream through HM30 Image Transmission System

A2 mini gimbal camera can connect to HM30 air unit directly, then the video will be displayed in SIYI FPV app or other methods that HM30 system supports after binding the air unit to the ground unit.

Preparation

It is necessary to prepare the tools, firmware, and software below before outputting video stream in this way.

- HM30 Full HD Image Transmission System
- A2 mini Gimbal

2022 SIYI Technology Co., Ltd, All Rights Reserved

Mark

Above products can be purchased from SIYI directly or from SIYI authorized dealers.

- SIYI FPV App (v2.5.8.498 or latest version)

Mark

Above software can be downloaded from relevant product page on SIYI official website.

Steps

1. Power HM30 air unit and bind it with HM30 ground unit.
2. Connect A2 mini gimbal to HM30 air unit's video port.
3. Update SIYI FPV App on your Android device to the latest version.
4. Run SIYI FPV app, go to "Settings – Camera A2 mini", and select "SIYI Camera 1" (when IP addresses are 192.168.144.25), then it will display video stream. Gimbal rotation can be controlled on the Android device's touchscreen.

4.3 Output Video Stream to Third-Party Image Transmission Systems

SIYI gimbal cameras can output video stream to any third-party image transmission systems which provide Ethernet port and are compatible with RTSP video stream.

2022 SIYI Technology Co., Ltd, All Rights Reserved

In this way, it is necessary to prepare a customized video cable for connection between SIYI gimbal camera and the third-party image transmission system.

CAUTION

The "RX-" pinout on SIYI gimbal's video port should connect to the image transmission system video port's "RX-" pinout, and "RX+" pinout to "RX+" pinout. Do not cross the pinouts, otherwise it will cause damage to the device.

Steps

1. Power the air unit of the image transmission system and bind it with the ground unit.
2. Connect SIYI gimbal's video output port to the image transmission system's video input port.
3. Open RTSP video player and input SIYI gimbal's default RTSP addresses (rtsp://192.168.144.25:8554/main.264), if video displays normally, connection is successful.

4.4 Solutions to No Image

If SIYI gimbal failed to output video or the video stream cannot be displayed properly, please follow the steps below to investigate possible reasons.

2022 SIYI Technology Co., Ltd, All Rights Reserved

1. Confirm if the image transmission system ground unit is bound with the air unit and if camera is connected to the air unit.
2. Check Camera IP addresses and RTSP addresses.

If video stream still does not display, please follow the steps below and make a deep investigation according to the video output mode and the video display device you use.

4.4.1 Video Output to Android Device

1. Input SIYI gimbal camera's default IP addresses "192.168.144.25" in the "Ping Tools" app and check if the network communication is successful. If there is a response, then check if the RTSP address in the video player is correct.

Successful Network Communication

2022 SIYI Technology Co., Ltd, All Rights Reserved

Network Communication Failed

2. If the network communication is failed, then please check if the communication between the image transmission system's ground unit and the air unit is successful. If it is, then please check if the video cable between camera and image transmission system's air unit is good, and if the voltage input is in normal range.

4.4.2 Video Output to Windows Device

1. Use the "Win + R" key combo to wake up the "Run" program and input the command "cmd".

2022 SIYI Technology Co., Ltd, All Rights Reserved

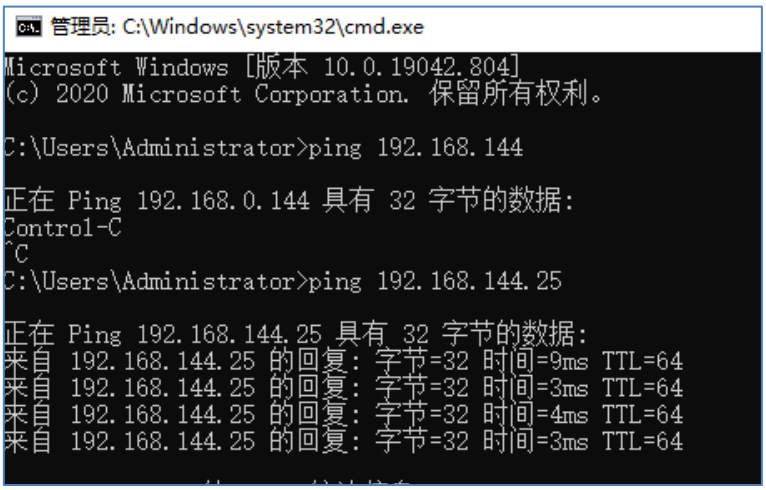

Successful Network Communication

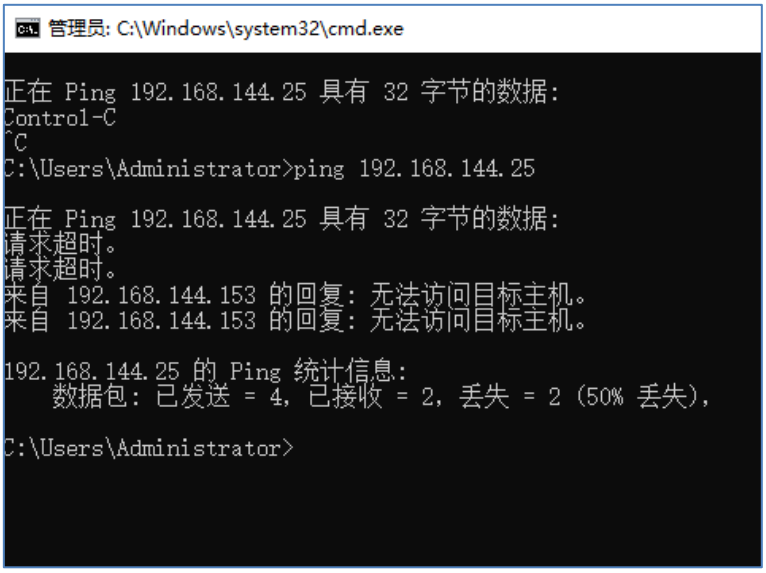

Network Communication Failed

2. Input the ZR10 gimbal camera's default IP addresses "192.168.144.25" and press the "Enter" key to check if communication is successful. If it is successful, please check if the RTSP addresses in the RTSP player is correct or try to switch to other video players.

2022 SIYI Technology Co., Ltd, All Rights Reserved

3. If the network communication is failed, then please check if the communication between the image transmission system's ground unit and the air unit is successful. If it is, then please check if the video cable between camera and image transmission system's air unit is good, and if the voltage input is in normal range.

Mark

If you have done investigation by following all steps above, but the reason is still not located, please contact your dealer or contact SIYI Support immediately.

4.5 Common IP Addresses

SIYI Gimbal's Default IP Addresses: 192.168.144.25

SIYI Gimbal's Default RTSP Addresses:

rtsp://192.168.144.25:8554/main.264

SIYI FPV App's "SIYI Camera 1" IP Addresses: 192.168.144.25

SIYI FPV App's "SIYI Camera 2" IP Addresses: 192.168.144.26

2022 SIYI Technology Co., Ltd, All Rights Reserved

5 SIYI FPV APP

SIYI FPV is an Android application developed by SIYI to configure multiple SIYI devices for image transmission settings, camera settings, video stream display, and link status monitor.

Mark

The manual is edited based on SIYI FPV App v2.5.498.

SIYI FPV App can be download from the SIYI official links.

SIYI FPV App compatible SIYI devices.

- A2 mini Ultra-Wide-Angle FPV Gimbal
- MK32 Enterprise Handheld Ground Station
- A8 mini AI Mini Zoom Gimbal Camera
- ZR10 2K QHD 30X Hybrid Zoom Gimbal Camera
- R1 / R1M HD Recording FPV Camera
- Air Unit HDMI Input Converter
- HM30 Full HD Image Transmission System
- MK15 / MK15E Mini HD Handheld Smart Controller

2022 SIYI Technology Co., Ltd, All Rights Reserved

SIYI FPV App OSD Information Definition

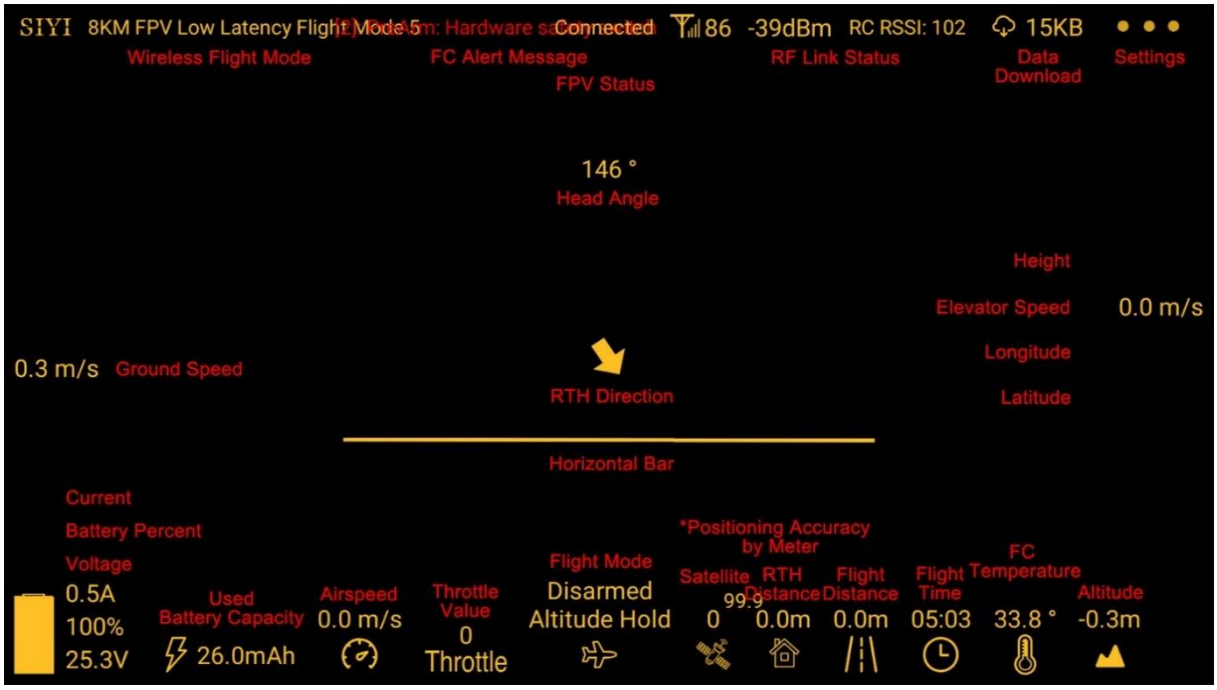

SIYI FPV Camera Function Icon Definition

2022 SIYI Technology Co., Ltd, All Rights Reserved

5.1 Settings

In the “Settings” page, you can configure camera IP Addresses, configure application interface, switch decoding type.

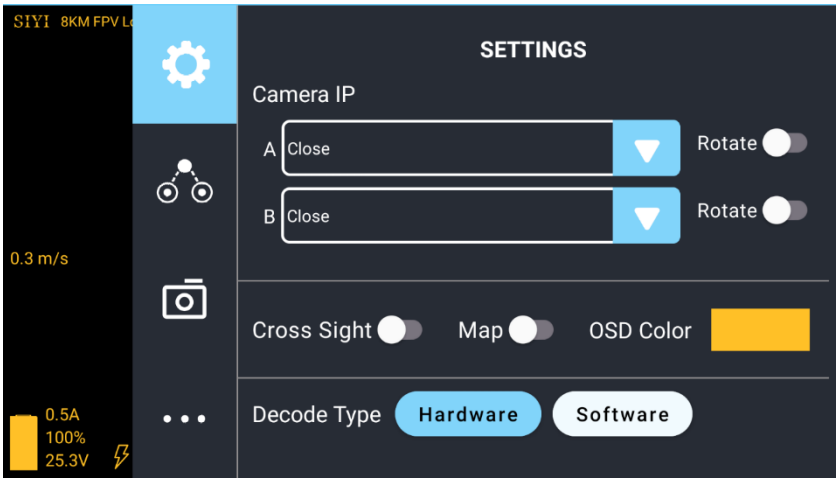

About Settings

Camera IP: Select SIYI Camera 1 and SIYI Camera 2, or input camera RTSP addresses manually, or disable image. The “Rotate” buttons can rotate the image in 180 degrees.

Cross Sight: Display a cross sight in the center of the image.

Map: Display the flight map at the left-bottom corner of the app.

OSD Color: Adjust the color of all OSD information.

Decoding Type: Switch between “Hardware Decoding” and “Software Decoding”. Please refer to your video input device to choose the decoding type with the best performance.

5.2 Link Status

Display the link status directly over the FPV image.

2022 SIYI Technology Co., Ltd, All Rights Reserved

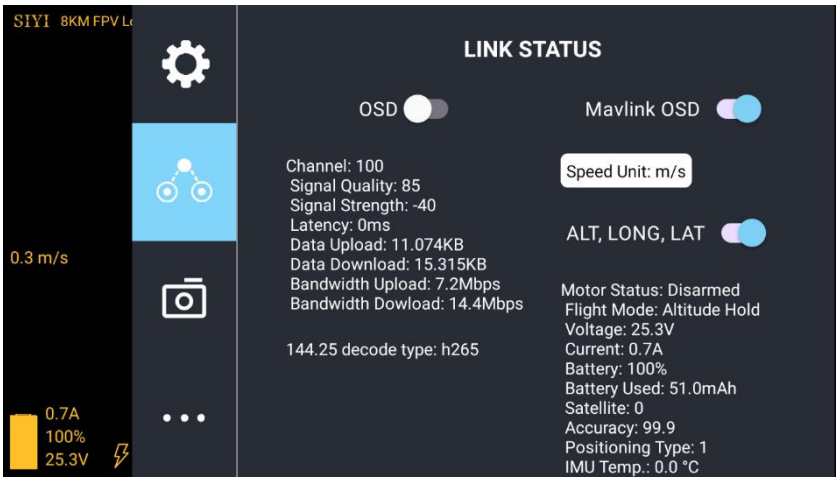

About Link Status

OSD: Enable / disable standard OSD information.

Mavlink OSD: Enable / disable Mavlink OSD information.

Speed Unit: Switch speed unit between meter per seconds and kilometer per hour.

Longitude and Latitude: Enable / disable information.

5.3 Gimbal Camera

Configure the basic functions for SIYI gimbal cameras and cameras.

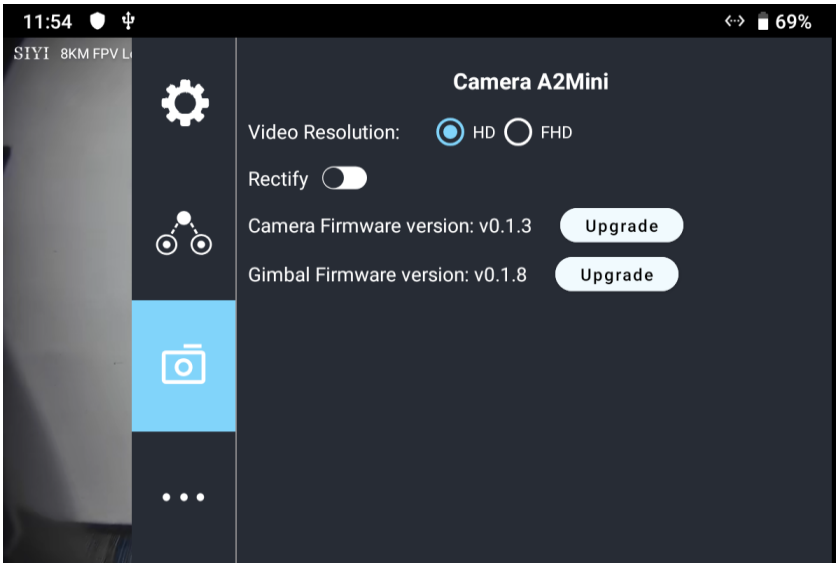

2022 SIYI Technology Co., Ltd, All Rights Reserved

About Gimbal Camera

Video Resolution: Switch camera real-time streaming resolution between HD (720p) and Full HD (1080p).

Distortion Correction: Turn on/off A2 mini gimbal's distortion correction function.

Camera Firmware Version: Display the current camera firmware version.

Gimbal Firmware Version: Display the current gimbal firmware version.

Firmware Upgrade

A2 mini gimbal supports firmware upgrade through "SIYI FPV" app.

Before upgrade, it is necessary to prepare the tools, software, and firmware below.

- MK15 Mini Handheld Smart Controller

Mark

You can also use MK32 Enterprise Ground Station, HM30 Full HD Image Transmission System, or compatible third-party links for A2 mini gimbal's firmware upgrade.

- SIYI FPV App (v2.5.8.498 or latest version)
- Camera Firmware
- Gimbal Firmware

2022 SIYI Technology Co., Ltd, All Rights Reserved

Mark

About tools and firmware can be downloaded from the relevant product pages on SIYI official website.

Firmware Upgrade Steps

1. Install the latest SIYI FPV app on your MK15 remote controller and save the firmware files into MK15 Android system storage in advance.
2. Make sure that MK15 remote controller is communicating with the air unit and A2 mini gimbal is already connected to the air unit.
3. Run SIYI FPV app, go to “Camera A2 mini” page.

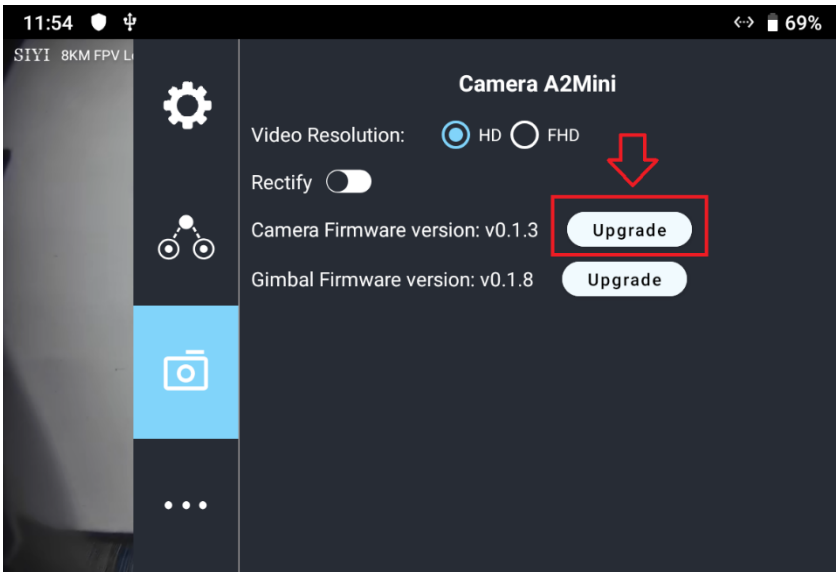

4. Tap the “Upgrade” button after the firmware upgrade option and find the relevant firmware.

2022 SIYI Technology Co., Ltd, All Rights Reserved

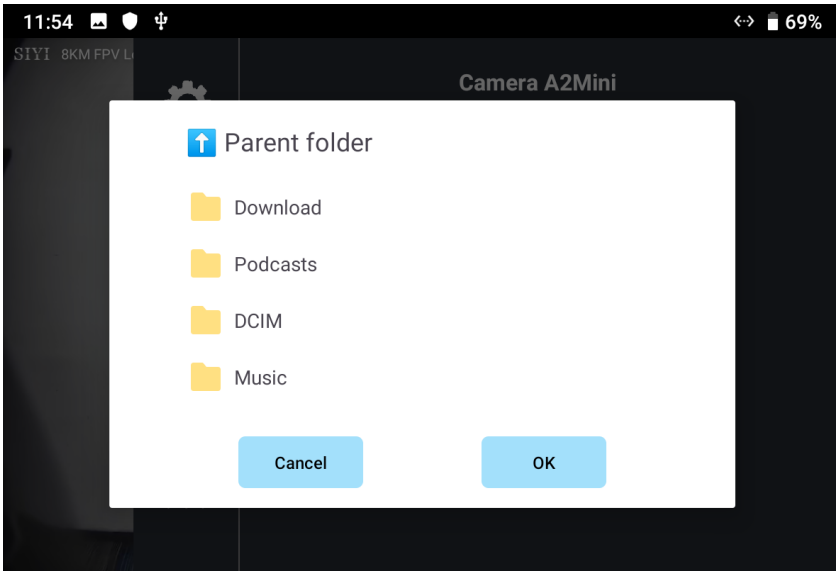

5. Select the firmware and tap “OK”, and wait for “Upgrade Successful”. Then restart SIYI FPV app to confirm if the firmware is already the latest.

5.4 About SIYI FPV

Displays the software version of SIYI FPV and common contact information of SIYI Technology.

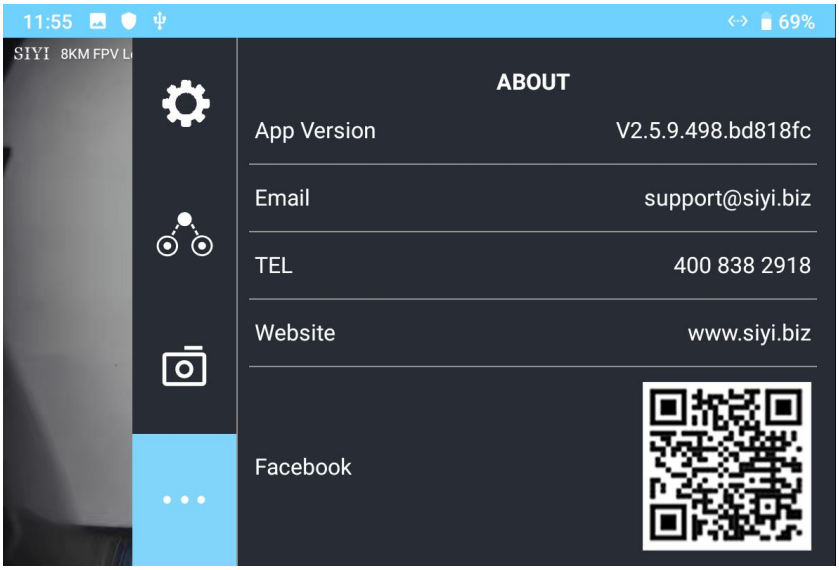

2022 SIYI Technology Co., Ltd, All Rights Reserved

6 After-sale Service

If there were any questions or problems using SIYI Technology's product, you can always try to send an email to SIYI Official A/S Center (support@siyi.biz) or consult your sales representative or dealer for answers or solutions.

6.1 Repair Service

If your purchased SIYI products cannot work properly, please contact SIYI Official A/S Center for consulting.

Usually there are two situations for acquiring repair service.

- Product Defect
- Product Damage

SIYI products under the two situations can be sent back to SIYI for repairing. Defect products with valid warranty can be repaired for free. Defect products without valid warranty or damaged products should be charged of repair fees after repairing. Please refer to SIYI's Official A/S Quotation for detail.

2022 SIYI Technology Co., Ltd, All Rights Reserved

6.2 Warranty

SIYI Technology guarantees that, subject to the following conditions, Return & Refund Service, Replacement Service, and Warranty Repair Service can be requested. Please contact SIYI directly (support@siyi.biz or your sales manager) or authorized SIYI dealer for more detail.

6.2.1 7-Day Return & Refund

You can request Return & Refund Service:

Within seven (7) days of receiving a product if the product has no manufacturing defect, has not been activated and is still in new or like-new condition.

Within seven (7) days of receiving a product if the product has a manufacturing defect.

Return & Refund Service will not be provided where:

It is requested beyond seven (7) calendar days of receiving a product.

A product sent to SIYI for Return & Refund Service does not include all original accessories, attachments or packaging, or any item is not in new or like-new condition, i.e., with cracks, dents, or scratches.

A legal proof of purchase, receipt or invoice is not provided or is reasonably believed to have been forged or tampered with.

2022 SIYI Technology Co., Ltd, All Rights Reserved

Any fault or damage of the product is caused by unauthorized use or modification of the product, including exposure to moisture, entry of foreign bodies (water, oil, sand, etc.) or improper installation or operation.

Product labels, serial numbers, waterproof marks, etc. show signs of tampering or alteration.

Damage is caused to the product by uncontrollable external factors, including fire, floods, high winds, or lightning strikes.

A product is not delivered to SIYI within seven (7) calendar days after Return & Refund Service confirmation is sent from SIYI.

Other circumstances stated in this policy.

6.2.2 15-Day Replacement

You can request Replacement Service:

Within fifteen (15) calendar days of receiving the product if the product has sustained a substantial damage in transit, provided always that the damage proof issued by the carrier can be provided to SIYI.

Within fifteen (15) calendar days of receiving the product if the product does not match the original description of the product in one or more significant respects.

2022 SIYI Technology Co., Ltd, All Rights Reserved

Within fifteen (15) calendar days of receiving the product if the product suffers performance failure.

Replacement Service will not be provided where:

Service is requested more than fifteen (15) calendars days after receiving a product.

Legal proof-of-purchase, receipts, or invoices are not provided, or are reasonably believed to have been forged or tampered with.

A product sent to SIYI for replacement does not include all original accessories, attachments, and packaging, or contains items damaged by user error.

A product is found to have no defects after all appropriate tests are conducted by SIYI.

Any fault or damage of the product is caused by unauthorized use or modification of the product, including exposure to moisture, entry of foreign bodies (water, oil, sand, etc.) or improper installation or operation.

Damage is caused by uncontrollable external factors, including fires, floods, high winds, or lightning strikes.

Received product has not been sent back to SIYI seven (7) calendar days after replacement confirmation from SIYI.

Proof of damage during transit issued by the carrier cannot be provided.

Other circumstances stated in this policy.

2022 SIYI Technology Co., Ltd, All Rights Reserved

6.2.3 1-Year Warranty Repair

You can request warranty repair service:

If a product does not function as warranted during the warranty period, you may obtain after-sales service by contacting SIYI's service center. You will need to provide a valid proof-of-purchase, receipt, or order number for the warranty service.

Charges may apply for services not covered by this Limited Warranty. Please contact SIYI for information specific to your location.

Please note that the warranty service is only available in the respective SIYI service regions where you purchased your SIYI product.

Warranty Repair service will not be provided where:

Crashes or fire damage caused by non-manufacturing factors, including but not limited to pilot errors.

Damage caused by unauthorized modification, disassembly, or shell opening not in accordance with official instructions or manuals.

Damage caused by improper installation, in correct use, or operation not in accordance with official instructions or manuals.

Damage caused by non-authorized service provider.

Damage caused by unauthorized modification of circuits and mismatch or misuse of the battery and charger.

2022 SIYI Technology Co., Ltd, All Rights Reserved

Damage caused by operation in bad weather (i.e., strong winds, rain, sand/dust storms, etc.)

Damage caused by operating the product in an environment with electromagnetic interference (i.e., in mining areas or close to radio transmission towers, high-voltage wires, substations, etc.)

Damage caused by operating the product in an environment suffering from interference from other wireless devices (i.e., transmitter, video-downlink, Wi-Fi signals, etc.)

Damage caused by reliability or compatibility issues when using unauthorized third-party parts.

Damage caused by operating the unit with a low-charged or defective battery.

Products or parts with an altered identification label or from which the identification label has been removed.

2022 SIYI Technology Co., Ltd, All Rights Reserved

SIYI Technology (Shenzhen) Co., Ltd

Phone: +86 400 838 2918

A/S Center: support@siyi.biz

2022 SIYI Technology Co., Ltd, All Rights Reserved