TBS LUCID

FC and ESC series

Revision 2025-03-24

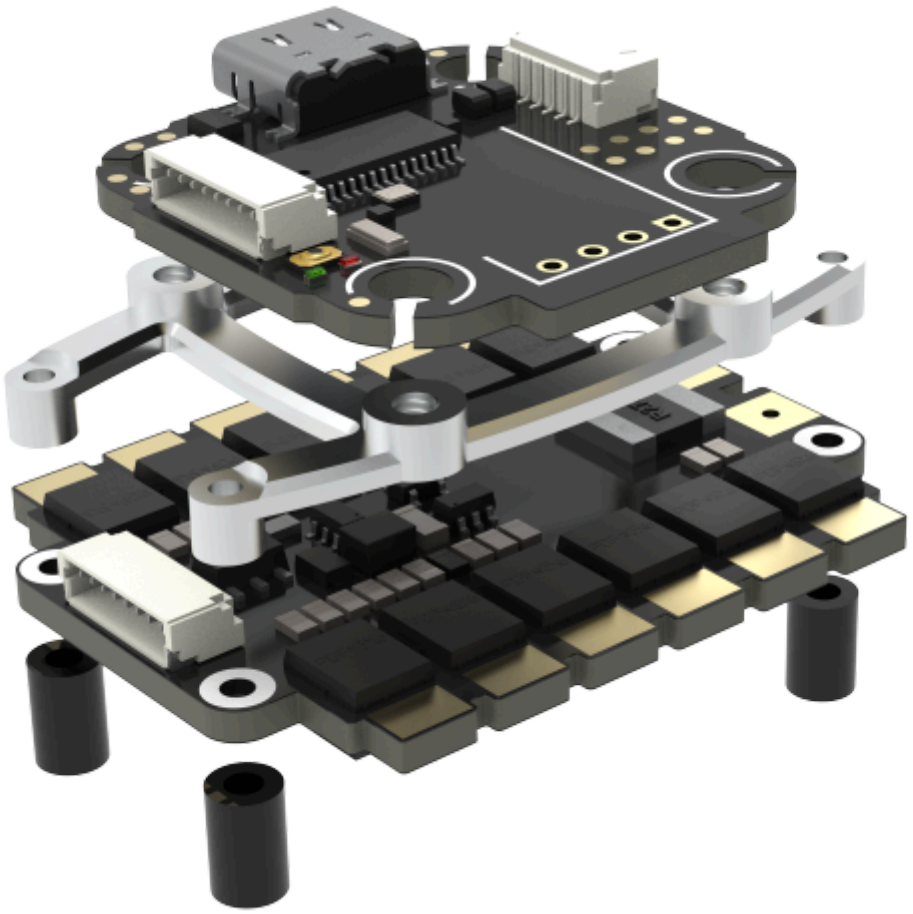

The TBS Lucid flight stack is the latest in product engineering at TBS. Built for racing and freestyle applications and developed to cater to the needs of both seasoned pilots and enthusiastic newcomers.

Table of content

- General
  - FAQ
  - Configuration and Upgrade
- LUCID F4 FC
  - Features
  - Firmware/ Target
  - Size and Mounting
  - DFU-Driver
  - Serial Ports
  - Pinout Solder Pads
  - Pinout Plugs
  - Additional Pins (S5, S6)
  - INAV and DJI Port
  - Betaflight Voltage Sensor Settings
  - Board Orientation
  - Connections
    - Receiver (direct mounted)
    - ESC (TBS LUCID 4in1)
    - HD Video System
    - Analog Video w. SmartAudio VTX
    - GPS and Compass
  - Stack Mounting
- LUCID H7 FC
  - Features
  - Firmware/ Target
  - Size and Mounting
  - Serial Ports
  - Pinout
  - Connections
    - Receiver
- LUCID AIO FC
  - Features
  - Firmware/ Target
  - Size and Mounting
  - Serial Ports
  - Pinout
  - Board Orientation
  - Sensor Scaling Settings
    - Current Sensor
    - Voltage Sensor

LUCID 4in1 3-6s ESC
- Features
- Firmware/ Target
- Size and Mounting
- Pinout
- Betaflight Current Sensor Settings

LUCID 4in1 3-8s ESC
- Features
- Firmware/ Target
- Size and Mounting
- Pinout
- Betaflight Current Sensor Settings

LUCID Single ESC
- Features
- Firmware/ Target
- Size and Mounting
- Pinout
- Connections
  - CRSF direct connection
- CRSF Features

LUCID Wing PDB
- Features
- Sensor Scaling Settings
  - Current Sensor
  - Voltage Sensor (when using external ADC from the PCB)
- Size and Mounting
- Pinout
- LED Connection

General

FAQ

If you have any questions after reading this manual, visit the TBS FAQ section.

Configuration and Upgrade

For the latest firmware version and configurator, visit the Github project pages:

Any ESC:	AlkaMotors32	Since FW AM1.99
F4 FC:	Betaflight	Since FW BF 4.5
	INAV	Since 7.1.2
	Ardu	Since 4.6.0 BETA3 (PRO FC)
H7 FC:	Betaflight	4.5.0
	INAV	8.0
	Ardu	4.6.0 BETA 2
AIO FC:	Betaflight	4.5.0
	INAV	not yet
	CROSSFIRE	6.10

LUCID F4 FC

The TBS Lucid flight stack is the latest in product engineering at TBS. Built for racing and freestyle applications and developed to cater to the needs of both seasoned pilots and enthusiastic newcomers.

The TBS Lucid Flight controller is a 20x20 masterpiece built for the Lucid flight stack but compatible with all 20x20 ESCs. It is similarly designed for the TBS Crossfire & TBS Tracer ecosystem but will work with any radio receiver - we don't judge :)

There are plug-and-play connectors for the DJI O3 digital system and 4in1 ESCs, following the Betaflight connector standard. The solder pads for auxiliary devices are designed and arranged to be easy to solder and logical for installation in your favorite drone frames, such as the TBS Source One.

For the professional pilot, an MPU6000 (Pro) variant is available (those who know will know), while the ICM-42688P (Freestyle) based version offers a state-of-the-art gyro solution at a better price.

Features

AT32F435, ICM-42688P (freestyle version)/ MPU6000 (pro version) gyro, bmp388 baro, 4.51g
6 UARTs, 1 I2C, CROSSFIRE/ TRACER direct solder mount, DJI Airunit support, 4 Motor outputs
Built-in OSD, Blackbox (8MB),
3-6S input , built-in BEC: 9V@ 2.5A, 5V@ 2A

Firmware/ Target

Betaflight Target: TBS_LUCID_MOD_FC/ TBS_LUCID_FC, FW 4.5 or later

Below the NanoRX solder pads, if you can spot a “P1” printer on the PCB, you must use the “...MOD_FC” target otherwise, use the TBS_LUCID_FC target

Size and Mounting

31*29mm size
20*20mm mounting holes, M3 with installed dampening rubbers

DFU-Driver

In case you need to download the FC DFU driver manually:

- Visit the Artery Website and search for “F4 ISP”
- Download the “*ISP Programmer In-System-Programming tool supporting AT32 MCU*” file

ISP Multi-Port Programmer In-System-Multi-Port Programming tool supporting AT32 MCU	08_ISP Multi-Port ISP Multi-Port	V2.0.14	2024/05/29

- Unzip it, navigate to the *\Artery_DFU_DriverInstall* folder
- Run the installer
- Reboot you FC

Direct Download Link

Serial Ports

Port	Usage/ Available Pins
UART 1	Spare, full UART
UART 2	ESC Telemetry, RX only
UART 3	MSP, HD Video Connector, full UART
UART 4	S.BUS, HD Video connector, RX only
UART 5	Direct mounted Receiver, full UART
UART 7	GPS, full uart
UART 8	SmartAudio, full UART

Pinout Solder Pads

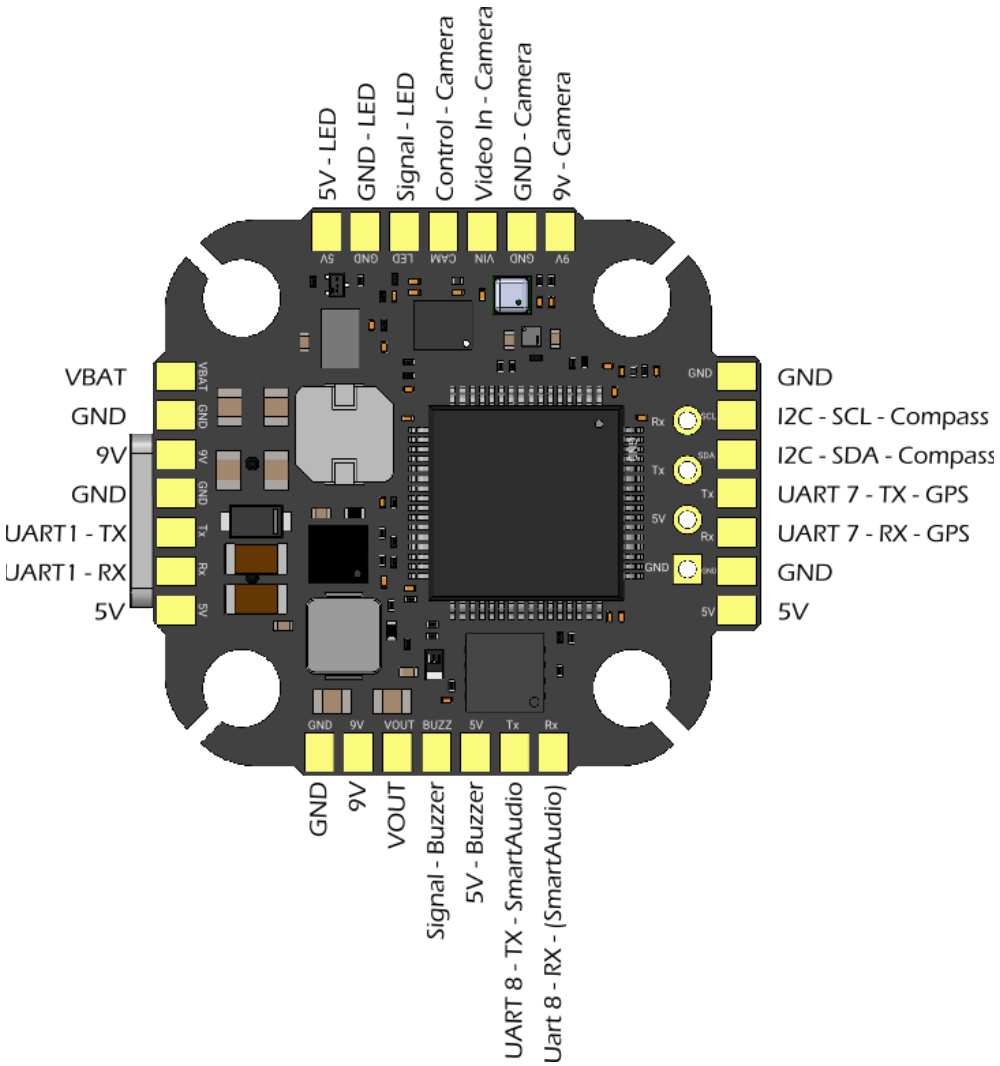

Pinout Plugs

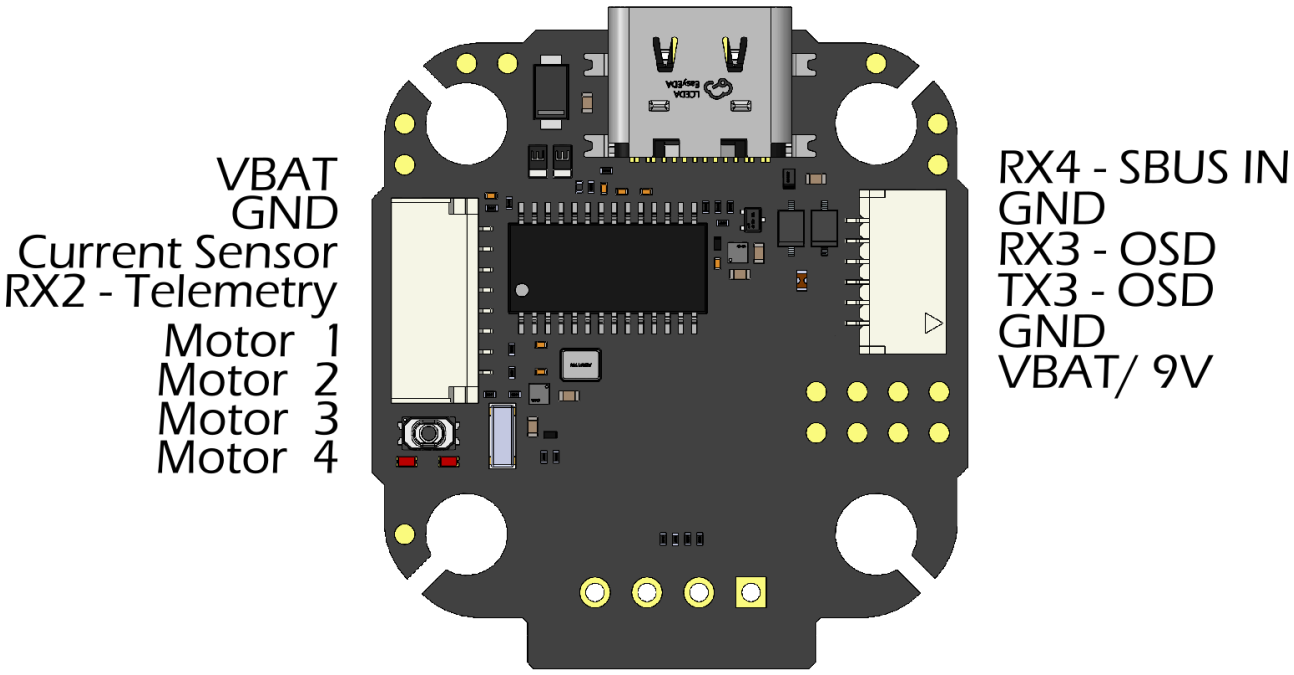

Additional Pins (S5, S6)

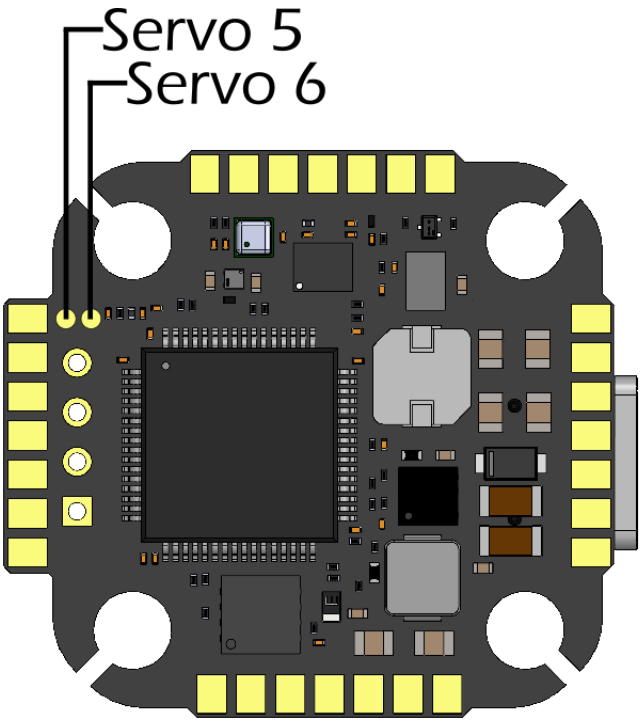

Additional Pins (CC)

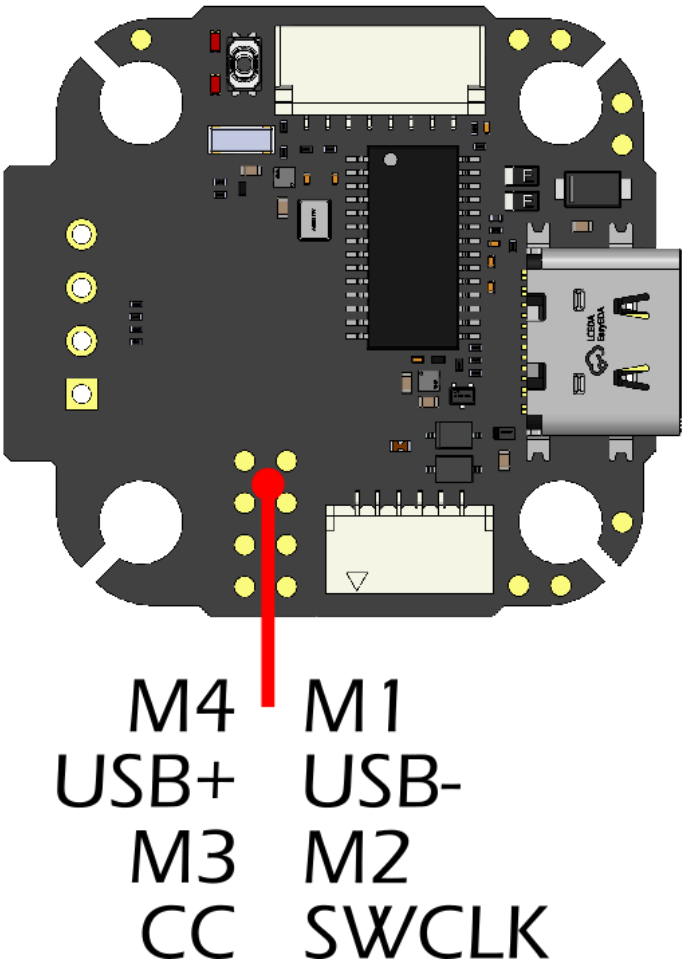

INAV and DJI Port

If you want to use INAV, TX3 and RX3 wires must be swapped.

Betaflight Voltage Sensor Settings

Scale: 111

Divider: 10

Value: 1

Pin: C00 (ADC_BATT 1)

Board Orientation

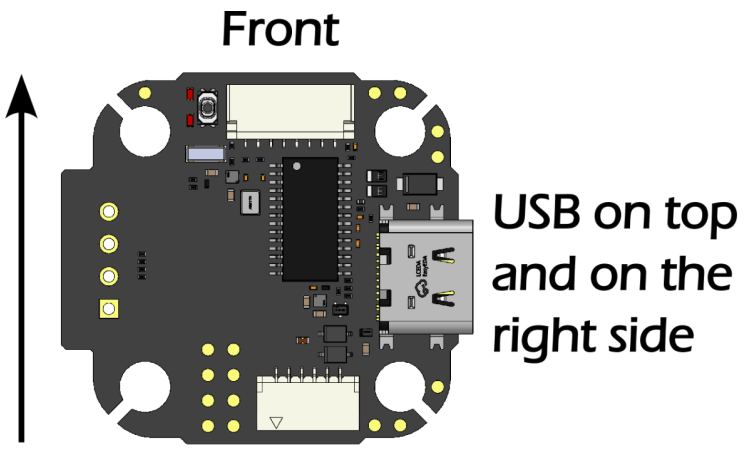

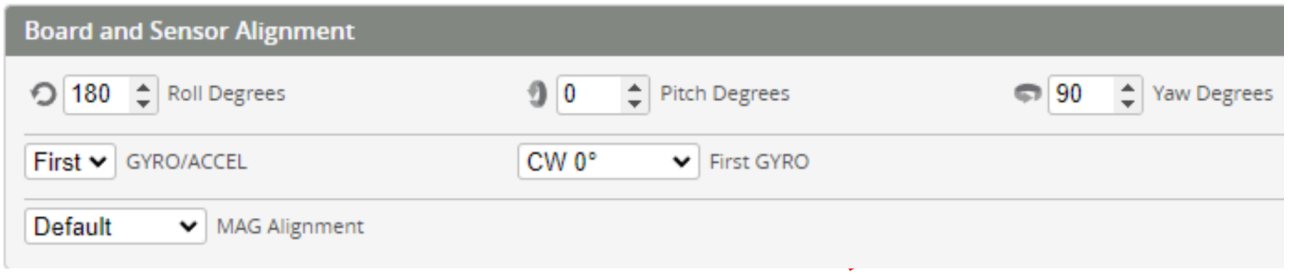

Freestyle - FC	Yaw = 90°
Pro - FC	Yaw = -90°

Connections

Receiver (direct mounted)

By soldering them together, you can install your CROSSFIRE/ TRACER receiver directly on the LUCID FC using the provided 4-pin header. Leave some space between them for the best heat dissipation.

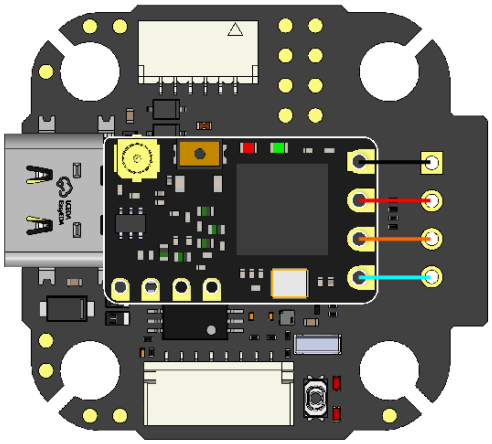

Important Note:

The “RX” and “TX” labels for the receiver are written from the receiver side. This means

Receiver TX -> FC TX,

Receiver RX -> FC RX

Betaflight ports setting:

UART 5 Serial RX = on

For a complete Betaflight and CROSSFIRE/ TRACER settings list, visit the CROSSFIRE/ TRACER manuals.

ESC (TBS LUCID 4in1)

When using the LUCID 4in1 ESC, connect the included 8-pin cable to the FC and the ESC. This connection will provide VBat, Gnd, 4 ESC signals, and an analog current sensor.

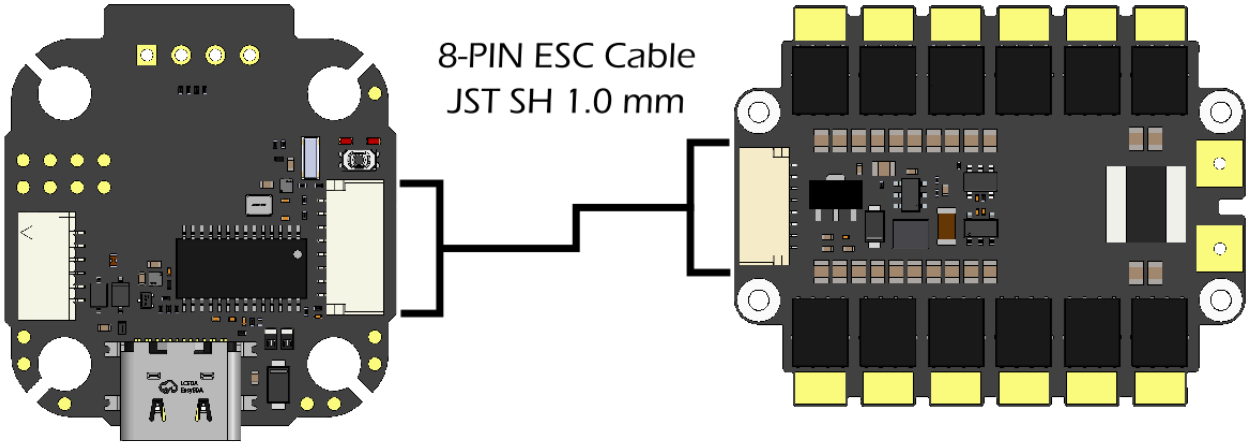

Betaflight ports setting:

UART 2 **Sensor Input: ESC, Baud Rate: Auto**

HD Video System

Connect your VTX to the designated port for your HD video system. The plug supports MSP and S.Bus if you want to use a DJI remote to control your drone.

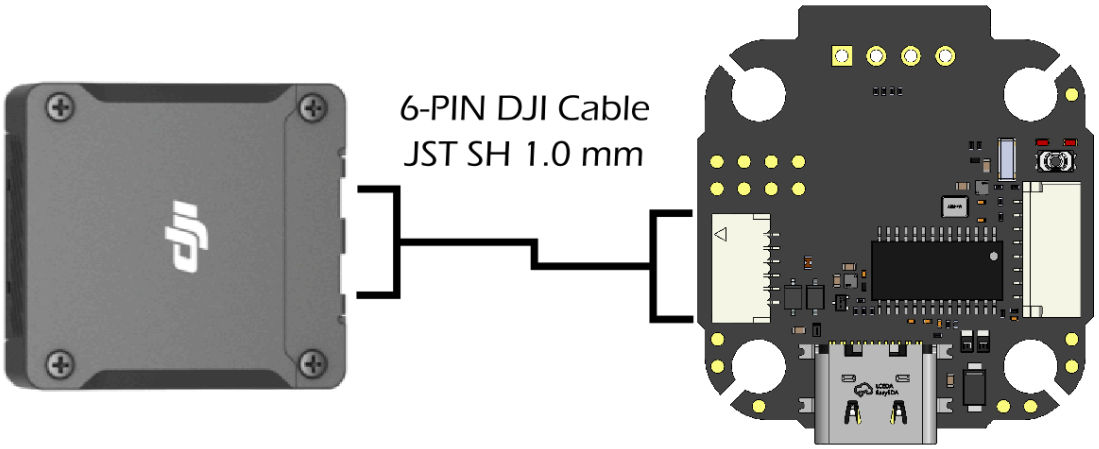

The Voltage selector, allowing you to select between 9V and VBat, is located next to the plug:

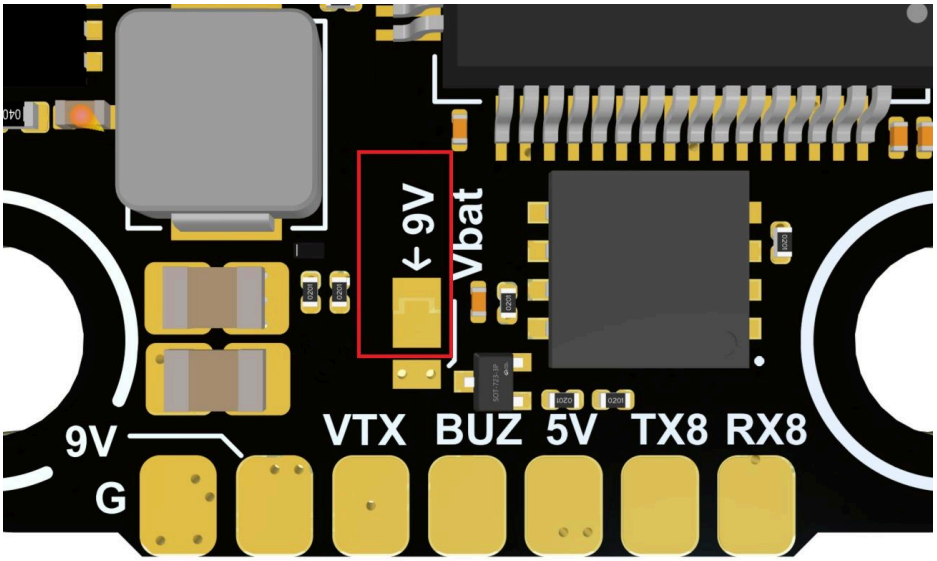

The factory standard is **9V** setting bridged.

Betaflight ports setting:

UART 3 **MSP = on, Baud Rate 115200***

To use the DJI internal S.Bus receiver:

UART 4 **Serial RX = on**

UART 5 **Serial RX = off**

***for details on the baud rate, consult the DJI manual

Analog Video w. SmartAudio VTX

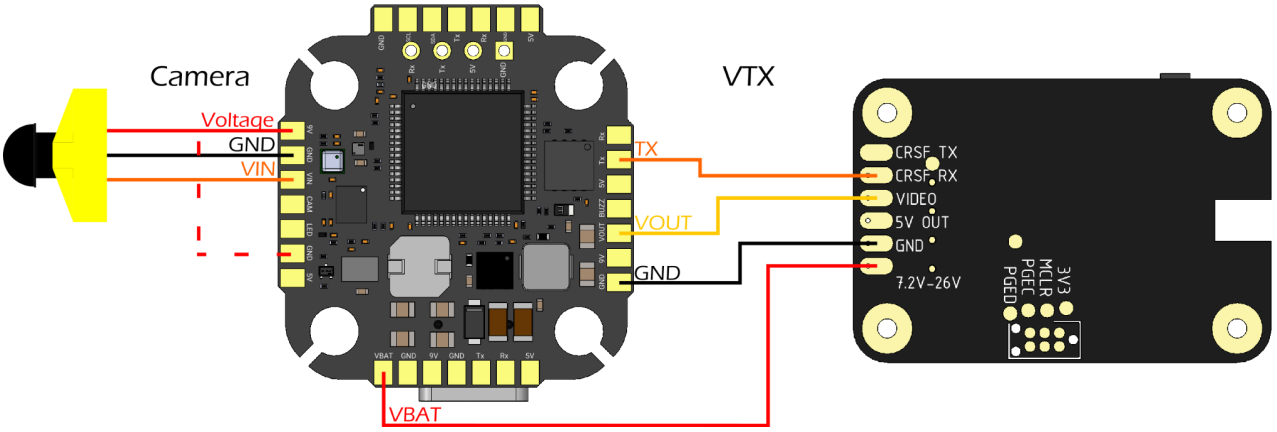

GPS and Compass

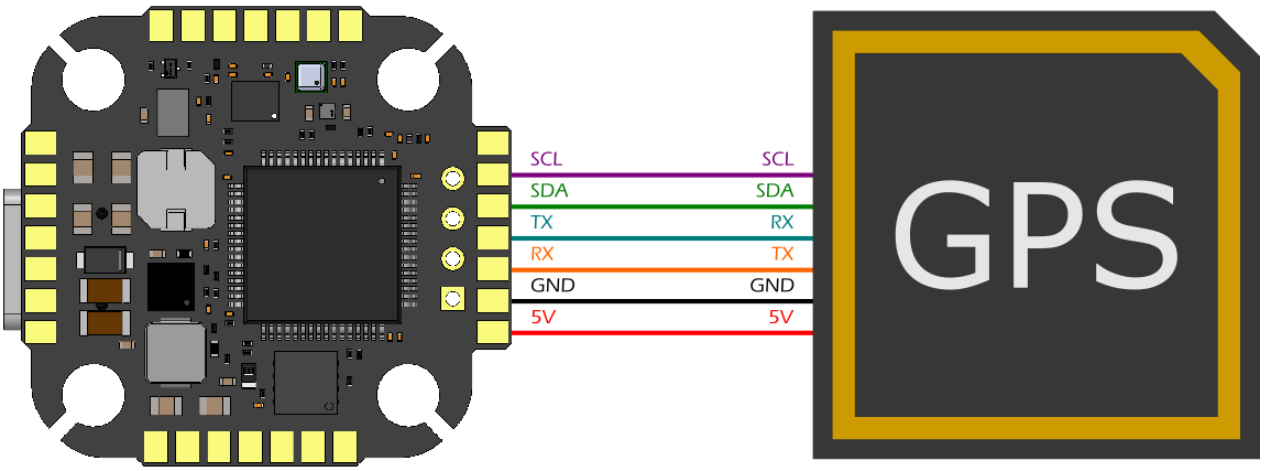

Betaflight ports setting:

UART 7 **Pheripherials: GPS, Baud Rate: depends on GPS receiver**

Stack Mounting

Installing the FC is easy with the provided Gorlia mount. If your frame does not support the ESC's mounting pattern, you can order an aluminum adapter for 30,5 * 30,5mm or 20 * 20mm mounting holes.

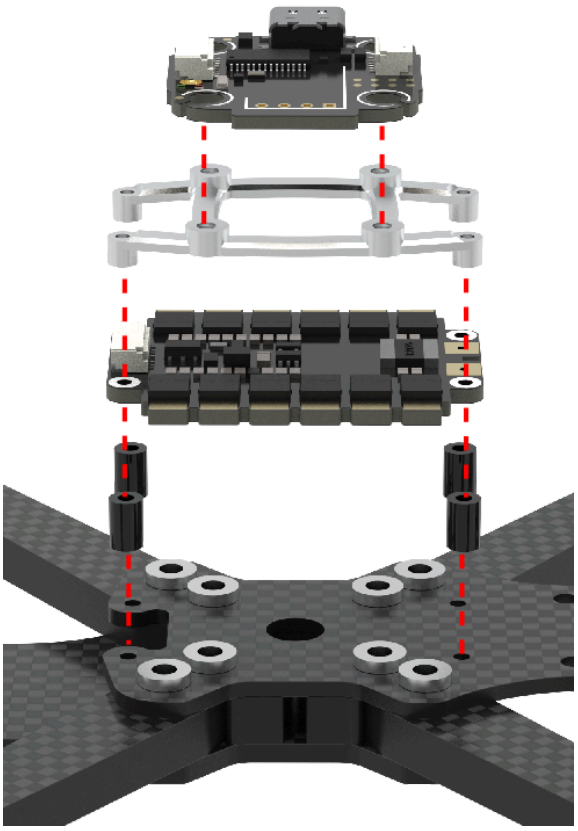

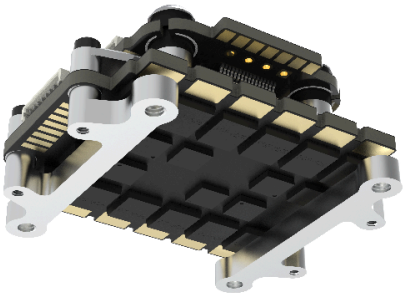

30,5 * 30,5mm adapter

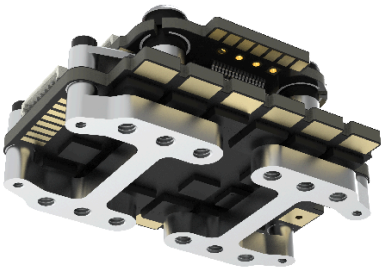

20 * 20mm adapter

LUCID H7 FC

The TBS Lucid H7 FC is a powerhouse built for those who crave peak performance and adaptability in their drones. Whether you're ripping through freestyle moves or fine-tuning a racing rig, the TBS Lucid H7 delivers with its robust 480MHz processor and seamless support for Betaflight, ArduPilot, and INAV. Featuring dual camera inputs, DJI FPV OSD compatibility, and a compact design, it fits effortlessly into any setup. Designed for both seasoned pros and enthusiastic newcomers, this flight controller makes pushing the limits of your drone easier than ever.

Features

STM32H743VIH6, Infineon DPS310 gyro

7 UARTs, 2 I2C, CAN, DJI Airunit support, 13 Motor outputs

Built-in OSD, SD card slot, multiple analog inputs,

3-8S input, built-in BEC: 5V@ 2A

ADC Vbat2 pad supports up to 69V

Firmware/ Target

BetaFlight target:	4.5.0
INAV target:	Since 8.0
Ardu target	not yet available

Size and Mounting

32*32

30.5*30.5 mounting holes, M3 with installed dampening rubbers

Serial Ports

Port	Usage/ Available Pins	ARDU Port	ARDU function	5V tolerant
UART 0	USB	SERIAL0	USB	yes
UART 1	SBus, full UART (just RX on DJI plug)	SERIAL1	SBus	yes
UART 2	ESC Telemetry, full UART	SERIAL2	GPS1	yes
UART 3	MSP, HD Video Connector, full UART with DMA	SERIAL3	MSP DisplayPort	yes
UART 4	Spare, full UART	SERIAL4	Telem1	yes
UART 6	RC input, full UART with DMA	SERIAL6	Receiver	yes
UART 7	Spare, full UART with DMA and Hardware flow control pins	SERIAL7	Telem2	no, 3.3V
UART 8	ESC Telemetry, full UART	SERIAL8	ESC	yes

Pinout

TOP

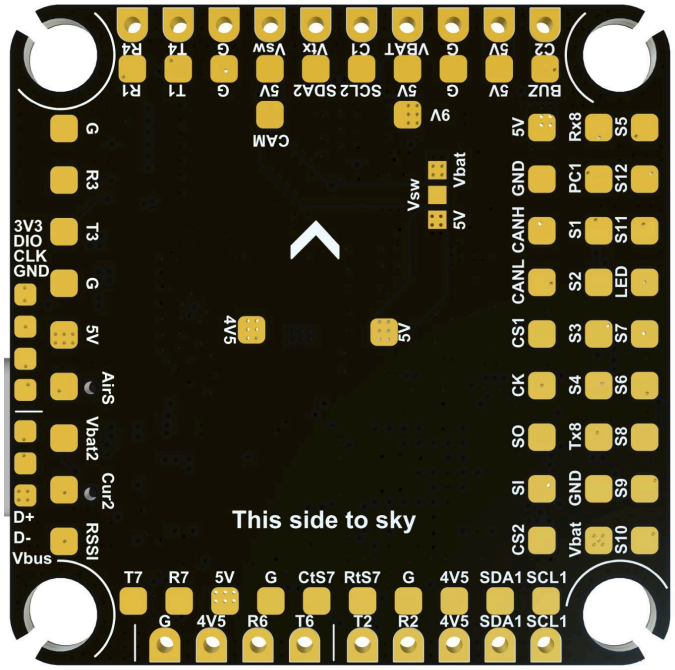

Special Pins

DIO	SWD breakout	CS1 CS2	SPI Chip select
CLK	SWD breakout	SI/	SPI MOSI/ MISO
		PC1	Analog in pin from ESC port breakout
D+	USB breakout		
D-	USB breakout	RtS7	UART7 Hardware flow control
VBus	USB breakout	CtS7	UART7 Hardware flow control

C1	Camera 1 video in*	CAM	Camer input, after switch*
C2	Camera 2 video in*	Vsw	PINIO switch with selectable voltage (by solder jumper)

AirS	Airspeed Sensor, 0-6.6V	Vbat2	External voltage sensor, 0-36V
Cur2	Secondary current sensor, 0-3.3V	RSSI	RSSI analog, 0-3.3V

use C1/C2 if you use two cameras (input before video switch)* ***or* *CAM for single camera use (after video switch*

BOTTOM

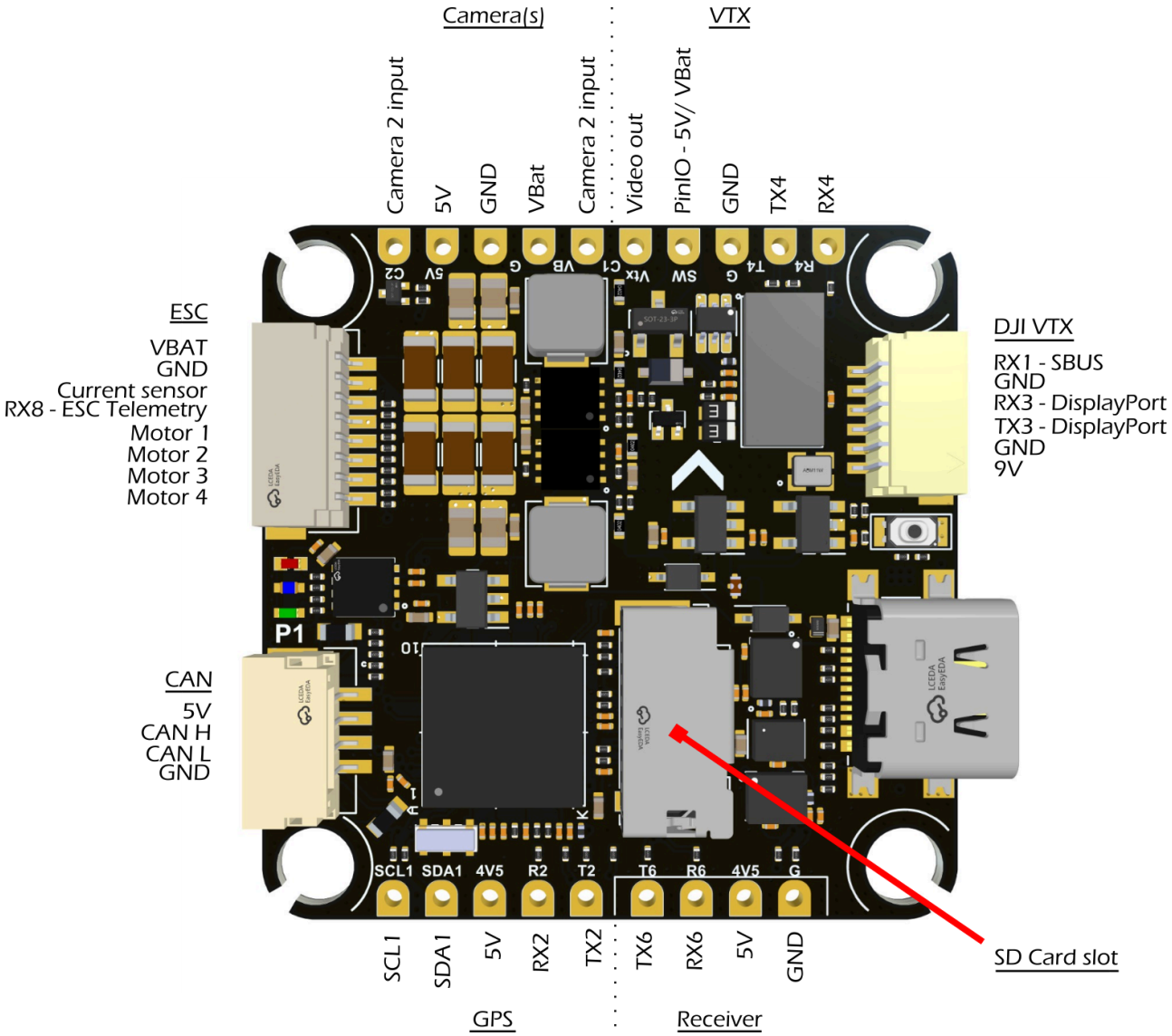
Camera(s)
VTX
Camera 2 input
5V
GND
VBat
Camera 2 input
Video out
PinIO - 5V/ VBat
GND
TX4
RX4
ESC
VBAT
GND
Current sensor
RX8 - ESC Telemetry
Motor 1
Motor 2
Motor 3
Motor 4
DJI VTX
RX1 - SBUS
GND
RX3 - DisplayPort
TX3 - DisplayPort
GND
9V
CAN
5V
CAN H
CAN L
GND
P1
SCL1
SDA1
4V5
R2
T2
T6
R6
4V5
G
SCL1
SDA1
5V
RX2
TX2
TX6
RX6
5V
GND
SD Card slot
GPS
Receiver

Connections

The ESC and DJI connection is identical to the [LUCID F4 FC.]

Receiver

The FC pinout matches the receiver pins, allowing the receiver to be directly soldered.

Note:

Soldering the receiver to the top plate on top of the FC, the binding button can become hard to reach

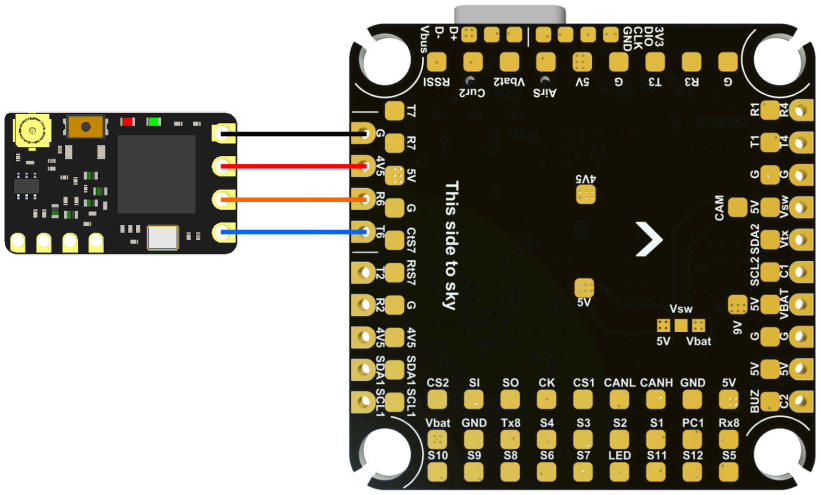

LUCID AIO FC

The TBS Lucid AIO 1-2S was engineered to tick a lot of boxes for long range 1S/2S drone pilots as well as whoop pilots that don't enjoy radio link limitations and need a bit of extra power from their stack.

Built to a 25x25 "Whoop" form factor, it is the only board that has the necessary grunt to run 2S boards without burning out, while also being capable of running 1S batteries down so low you will hear them beg for mercy.

The "AIO" stands for all in one, or a 3-in-1 specifically. Included is an Flight controller, 4in1 ESC and Crossfire Receiver. It also comes with an OSD chip for analog video.

It hopefully goes without saying that each TBS Lucid AIO is tested out of the factory and has been put through the wringer by some of the most seasoned whoop pilots before being offered for sale, which further distinguishes the board from some of the incumbents.

Features

AT32F435RMT7
1-2S LiPo input, 5v 2A (on 2S)/ 1.3A (1S) outputs
Built-In CROSSFIRE receiver
Two full UARTS + 1 TX only for SmartAudio
Up to 7A per Motor/ 24A max with Telemetry and Current Sensor

Firmware/ Target

BetaFlight target:	LUCID AIO - since 4.5.0
INAV target:	not yet available
CROSSFIRE:	6.10

Size and Mounting

32*32
30.5*30.5 mounting holes, M3 with installed dampening rubbers

Serial Ports

Port	Usage/ Available Pins
UART 1	Spare, full UART
UART 2	Smart Audio, TX only
UART 3	MSP, HD Video Connector, full UART
UART 5	Integrated Receiver, full UART

Pinout

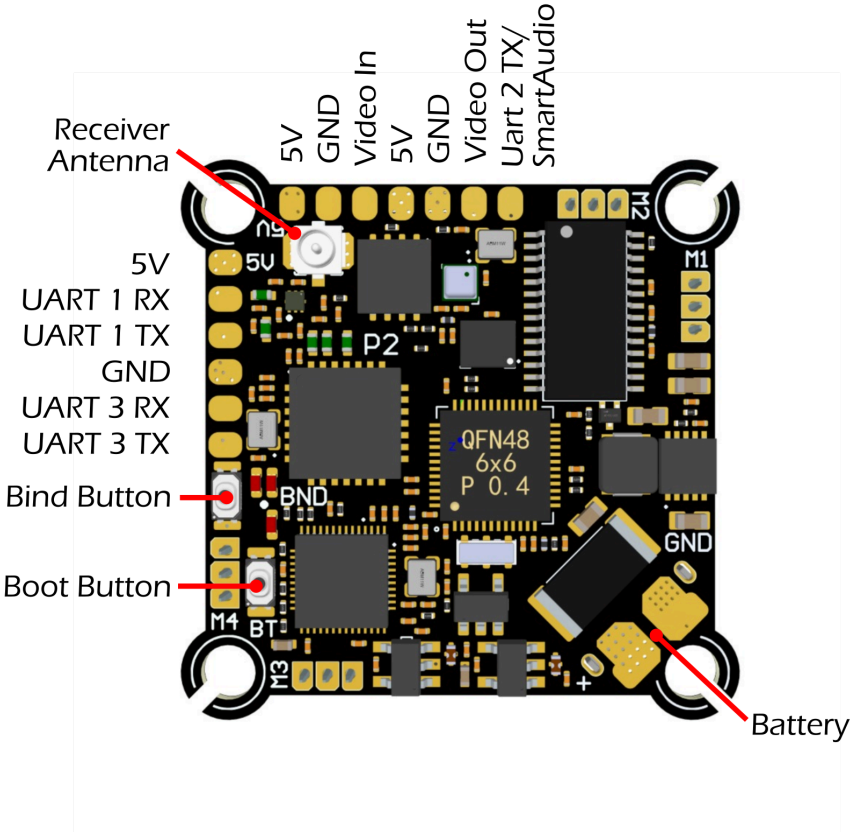
Receiver Antenna
5V
UART 1 RX
UART 1 TX
GND
UART 3 RX
UART 3 TX
Bind Button
Boot Button
5V
GND
Video In
5V
GND
Video Out
Uart 2 TX/ SmartAudio
Battery

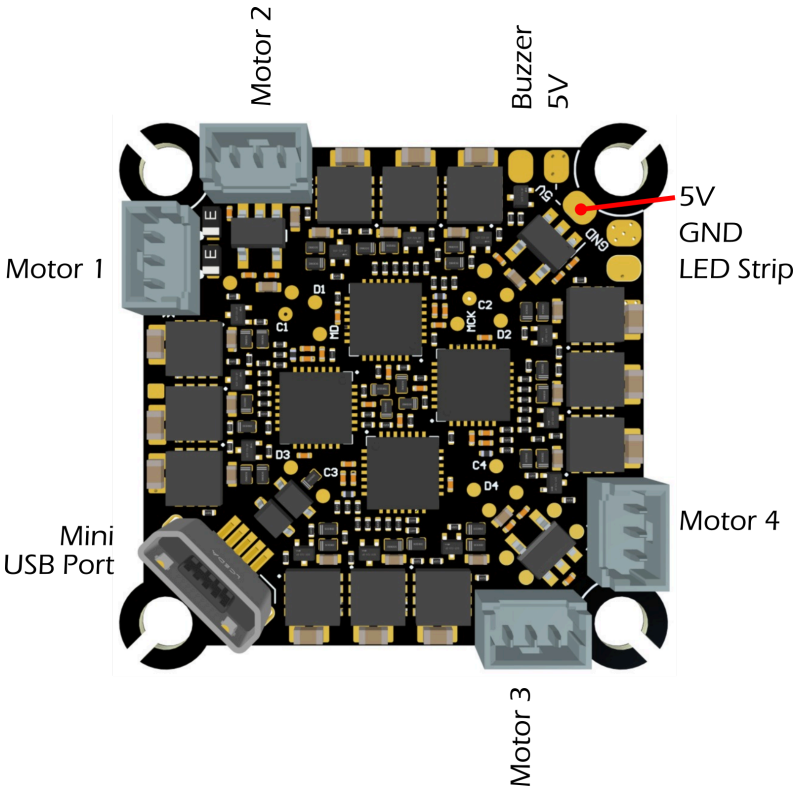
Motor 1
Motor 2
Buzzer
5V
5V
GND
LED Strip
Mini USB Port
Motor 4
Motor 3

Board Orientation

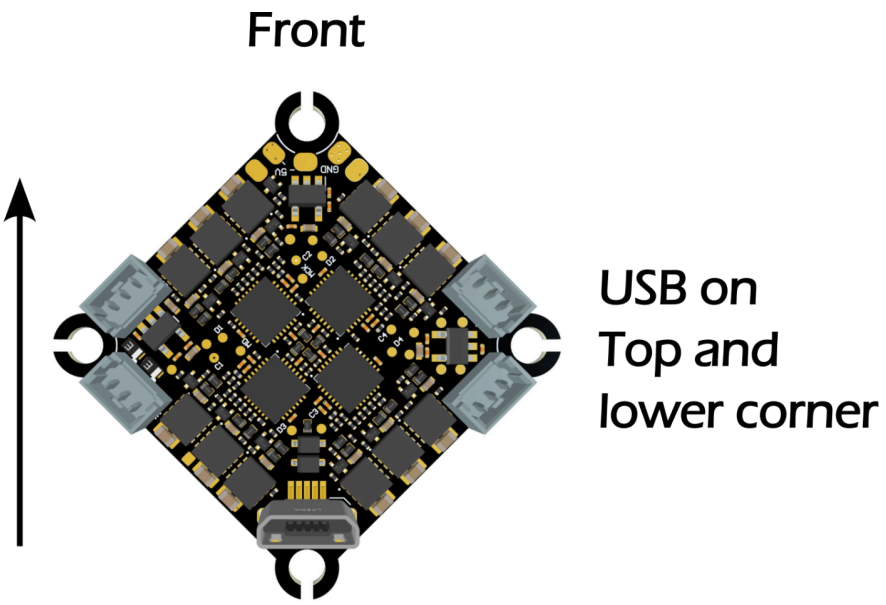

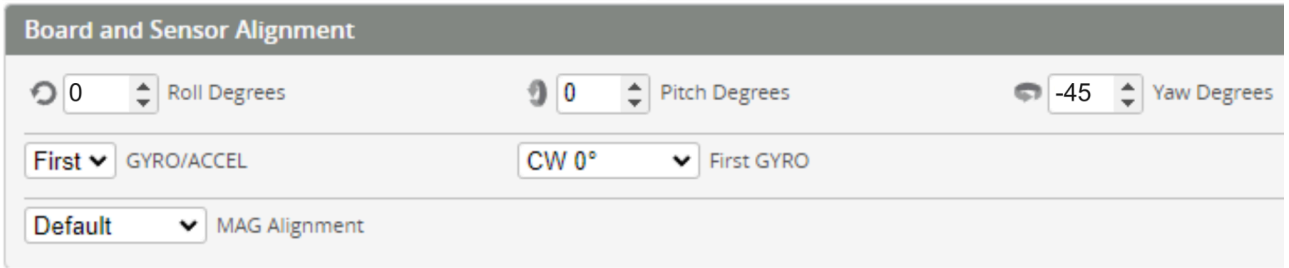

Sensor Scaling Settings

Current Sensor

Scale: 1300

Offset: 0

Voltage Sensor

Scale: 57

Divider Value: 18

Multiplier Value: 1

LUCID 4in1 3-6s ESC

The TBS Lucid 4in1 6S ESC is the latest in product engineering at TBS. Built for racing and freestyle applications and developed to cater to the needs of both seasoned pilots and enthusiastic newcomers.

Featuring an 8-layer high current density board with twice the average onboard capacitance, the ESC is built to withstand the harshest punishment of everyday FPV flying. Superior power delivery

Features

4in1 ESC, 60A continuous/ 70A peak(60s), 3-6s input, 13.81g
AlkaMotors32 (AM32) FW, current-sensor port
Bi-directional Dshot 300/600, KISS ESC Telemetry

Firmware/ Target

AlkaMotors32 Target: tbslu6s4in1, FW 1.99 or later

Size and Mounting

34*44mm size
GORILLA mounting, M2 - multi-position bracket (sold separately), including FC mounting adapter (black aluminum) for 20*20mm FCs

Pinout

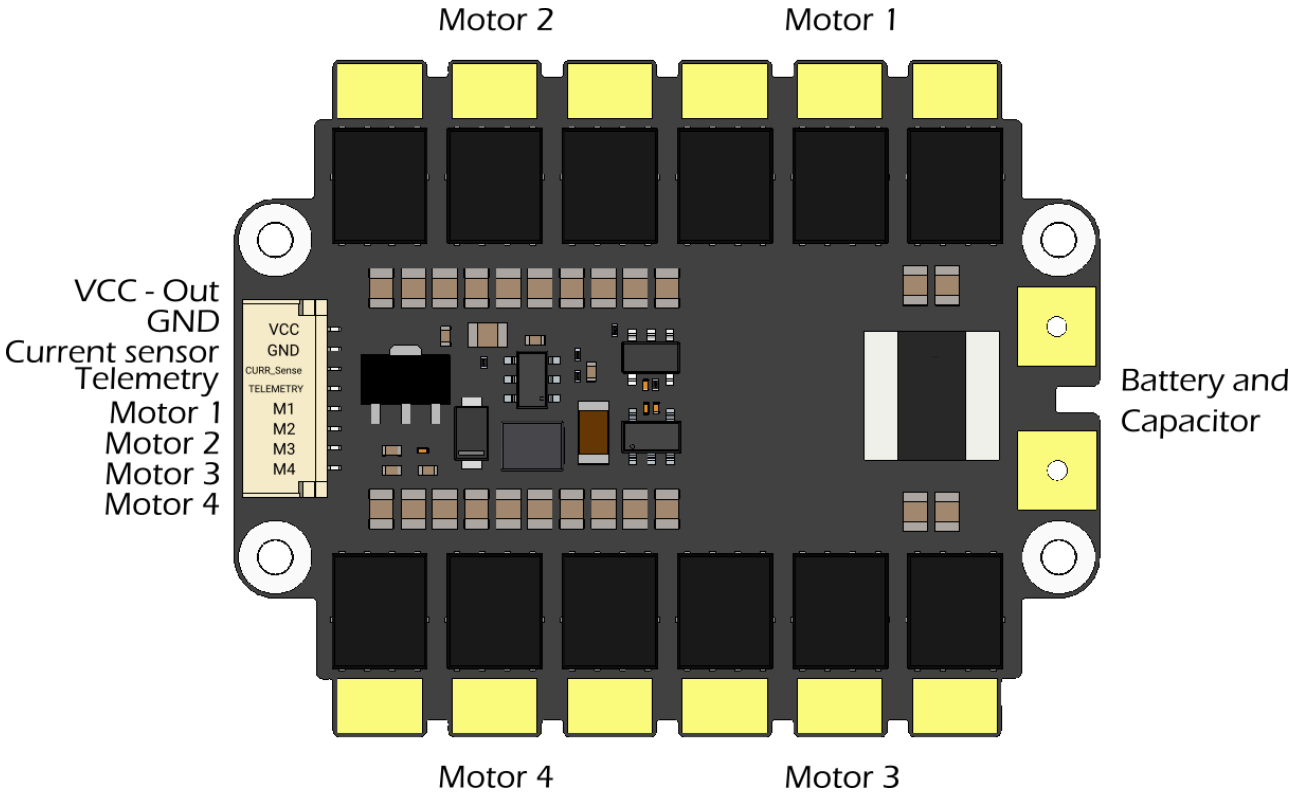

Betaflight Current Sensor Settings

Scale: 125

Offset: 0

LUCID 4in1 3-8s ESC

Featuring an 8-layer high current density board with twice the market average on-board capacitance, the ESC is built to withstand the harshest punishment of everyday FPV flying while delivering buttery-smooth flight characteristics paired with face-melting acceleration. By focusing on thermal dissipation from the ground up, the flight stack achieves excellent power to weight density without the need of heavy heat sinks.

Features

4in1 ESC, 55A x 4, 60 seconds/ 85A x 4, 10 seconds, 3-8s input, 17.58g

AlkaMotors32 (AM32) FW, current-sensor port

Bi-directional Dshot 300/600, KISS ESC Telemetry

Firmware/ Target

AlkaMotors32 Target: tbslu8s4in1, FW 1.99 or later ???

Size and Mounting

34*44mm size

30,5*30,5mm(M3) and GORILLA mounting(M2) - multi-position bracket (sold separately)

Pinout

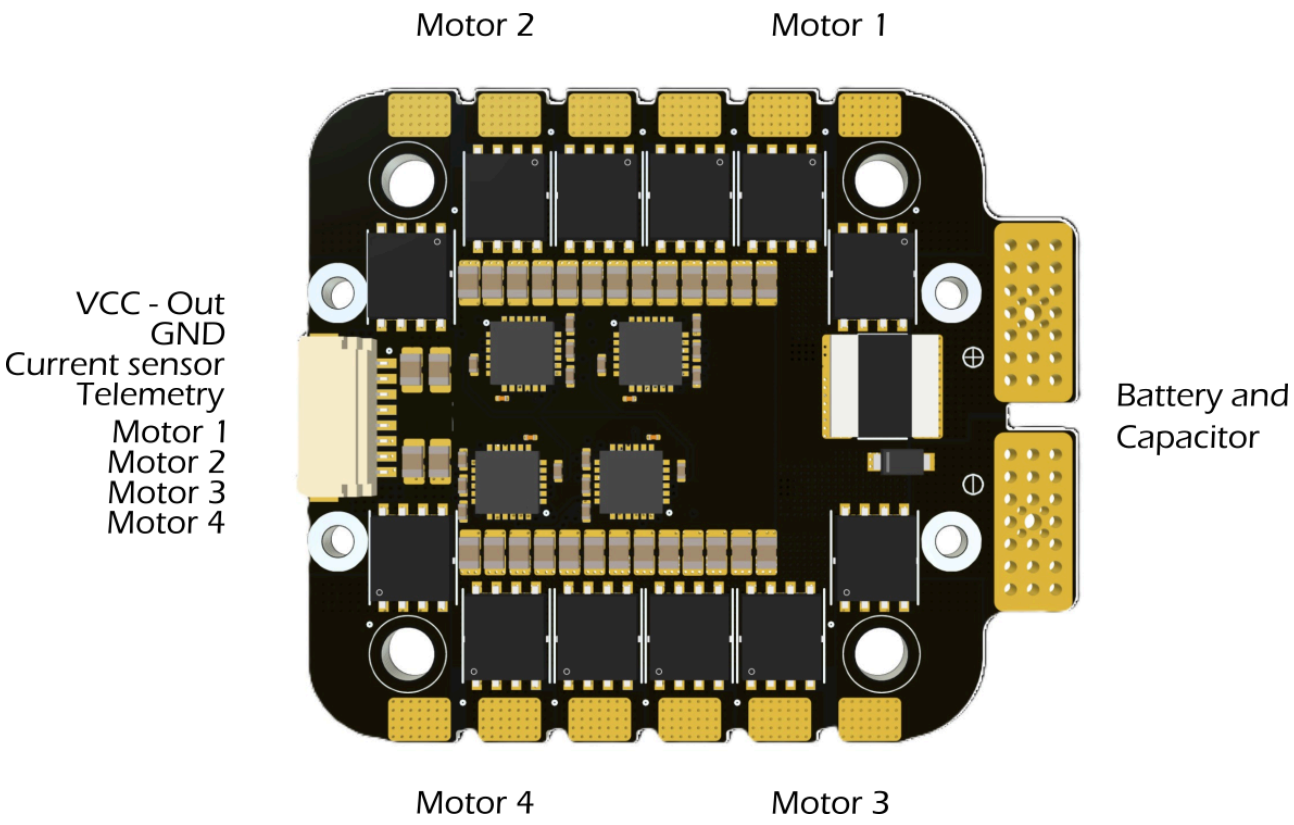

Betaflight Current Sensor Settings

Scale: 50

Offset: 0

LUCID Single ESC

The TBS Lucid 12S is a force to be reckoned with. Built for high voltage and high power applications that demand high reliability and power at your fingertips.

Featuring an 8-layer high current density board with excellent heat resistance, the ESC is built to withstand the harshest punishment of everyday flying while delivering excellent payload capabilities. With built-in TVS, voltage spikes are no longer a concern. The ESC achieves excellent power-to-weight density without needing heavy heat sinks by focusing on thermal dissipation from the ground up.

A close collaboration with AM32 allowed us to squeeze the last bit of performance without breaking the bank.

Features

Single ESC, 60A continuous, 70A peak(60s), 90Apeak(40s), 120A (30s), 3-12s input, 19g
AlkaMotors32 (AM32) FW,
Bi-directional Dshot 300/600, KISS ESC Telemetry

Firmware/ Target

AlkaMotors32 Target: AM32_TBS_12S_F421

Size and Mounting

57.75mm x 29mm

Pinout

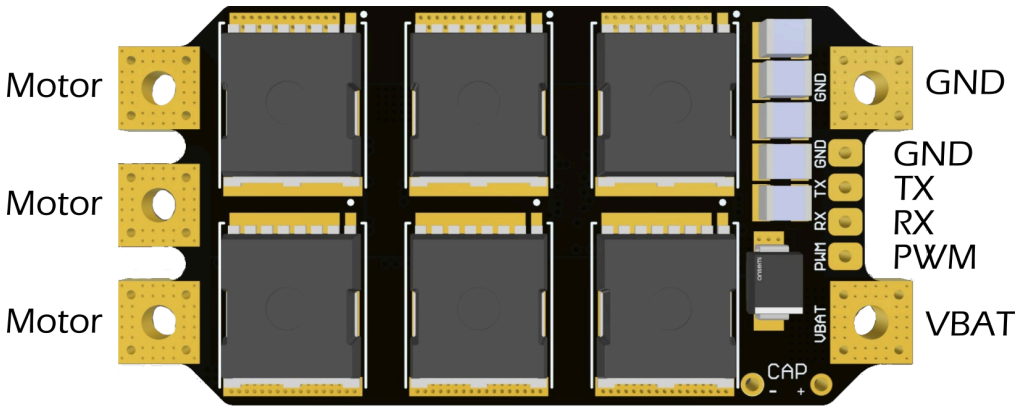

Connections

The ESC detects the incoming signal source by itself. If you want to use the CRSF direct connection, connect it as follows. PWM and any protocol supported by ALKAMotors firmware - except for CRSF - must be connected to the PWM pad.

CRSF direct connection

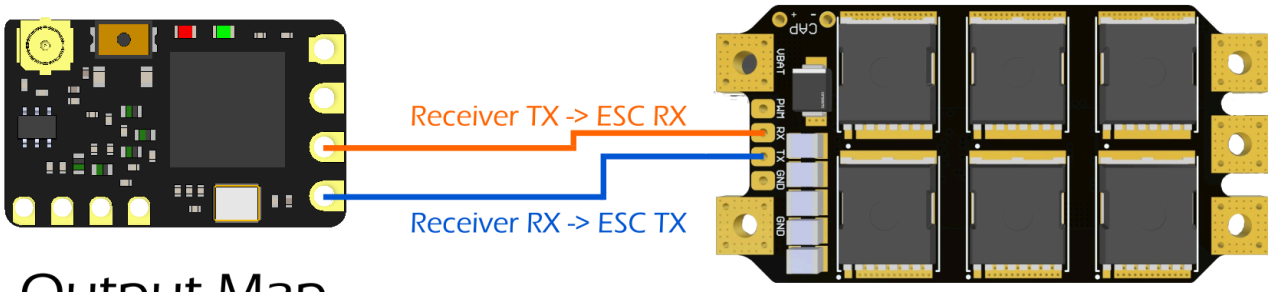

Output Map

Output 1	CRSF TX
Output 2	CRSF RX
Output 3	Ch 3
Output 4	SmartAudio
Output 5	BST SDA
Output 6	BST SCL

CRSF Features

- Telemetry sensors
- CRSF signal as RC input (channel selectable by the CRSF menu)
- Fully configurable by any AGENT on the go

LUCID Wing PDB

There is no doubt that innovation and choice in quadcopter FC's outpaces those of their wing counterparts. Yet, separate wing FC's are necessary due to the limited wiring space, lack of current sensing, necessary voltage rails and more. There are flight controllers specifically for wings, but they create a tasty bundle of wire spaghetti in your wing, which can lead to reliability issues at worst, or are an eye sore at best.

Admittedly, this PDB is made predominantly for the TBS's upcoming wing, but it's compatible with any wing that has up to 4 control servos and one or two motors. As such, it's worth a consideration to clean up both your analog or digital builds and recycle one of the 20x20 or 30.5x30.5 FCs you've surely got laying around.

With the latest revision, you can connect up to 10 servos, powered by either 5V or 8V and disable the buzzer by a switch if not needed.

Features

Built-in current sensor, single-point of connection for your whole setup to ease the wiring
12V/ 4A (FC, VTX and LED)
Servos V1: 6V/ 4A
Servos V2: 5V/8V
Current sensor: 200A burst, 90A continuous
Max input voltage: 60V (14S)

Sensor Scaling Settings

Current Sensor

Scale: 250 -> Please adjust it to fit your setup (cable length etc.)
Offset: 0

Voltage Sensor (when using external ADC from the PCB)

Inav: 2100

BetaFlight:
Scale: 201 -> Please adjust it to fit your setup (cable length etc.)
Divider Value: 20
Multiplier Value: 1

Size and Mounting

FC Mount: 30.5*30.5mm + 20*20mm

Direct gluing in your Wing or using a 3D print

Pinout V1

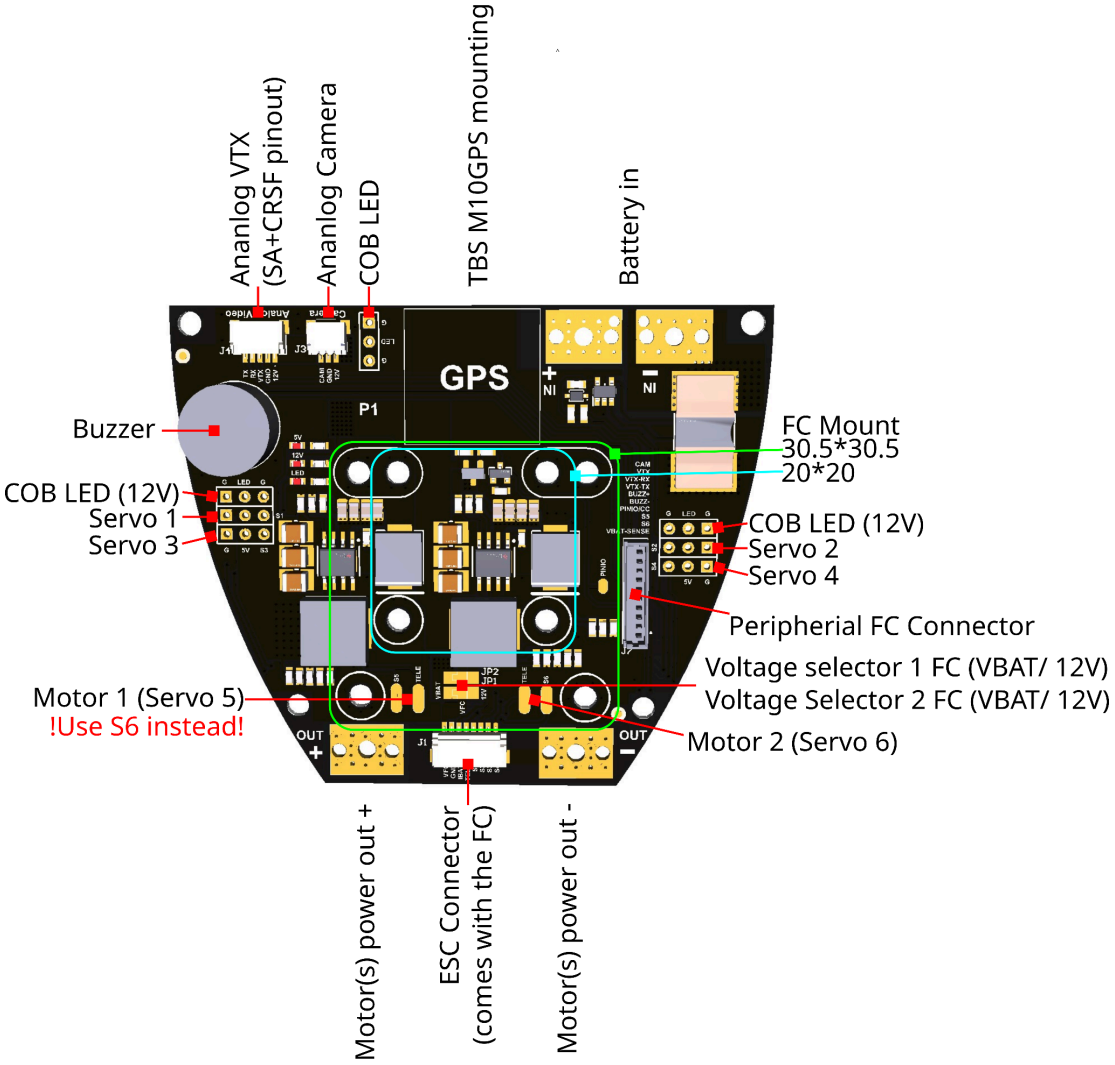

Warning:

Some PCBs got a short on *S5->GND*. Use S6 for the motor instead

Voltage Selector for FC

Both jumpers must be soldered to the same setting. If you just solder one, the FC will not get any supply voltage. Different solder settings will shorten the voltage supply, cause damage to the PCB, and may also damage your Battery and FC.

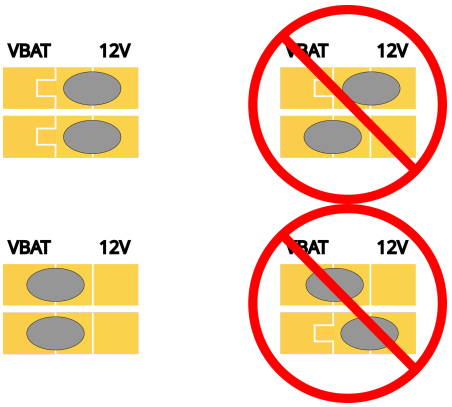

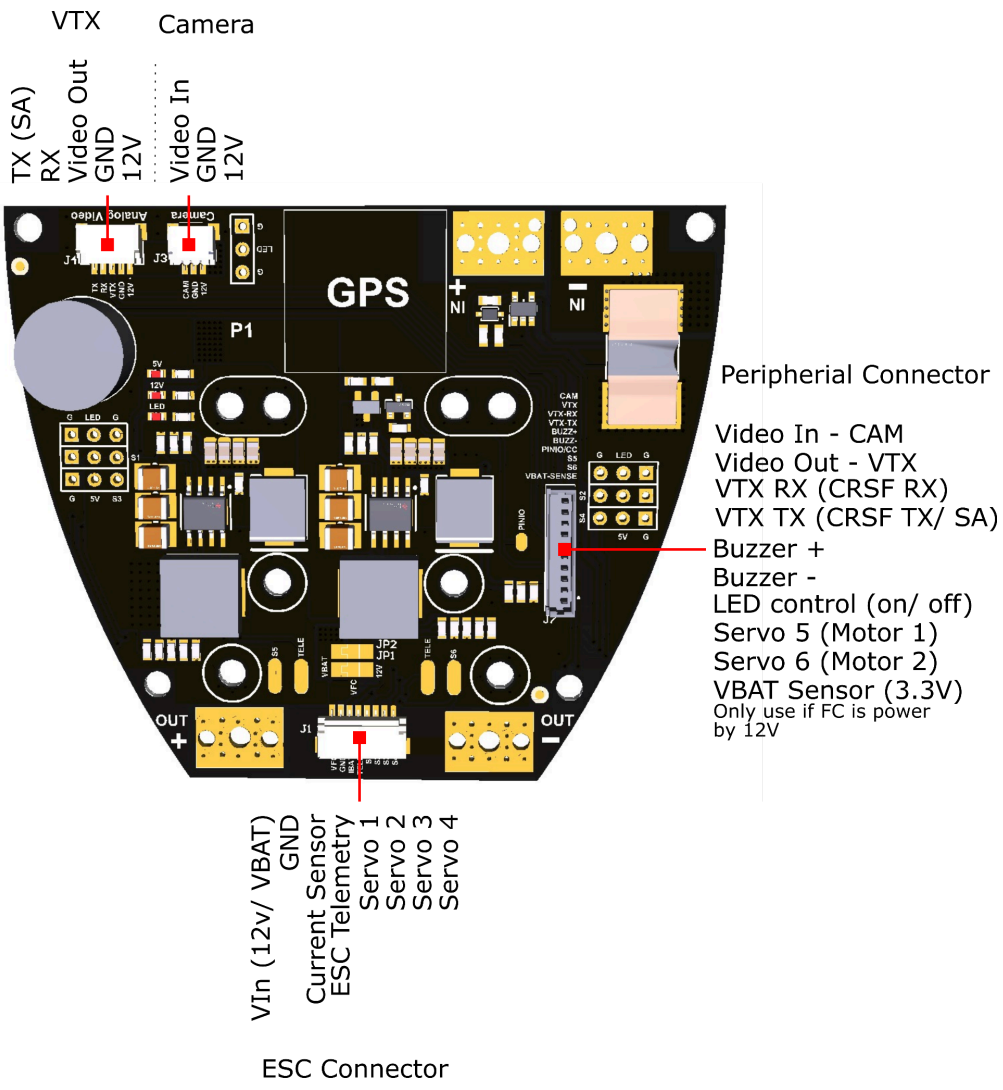

Pinout V2

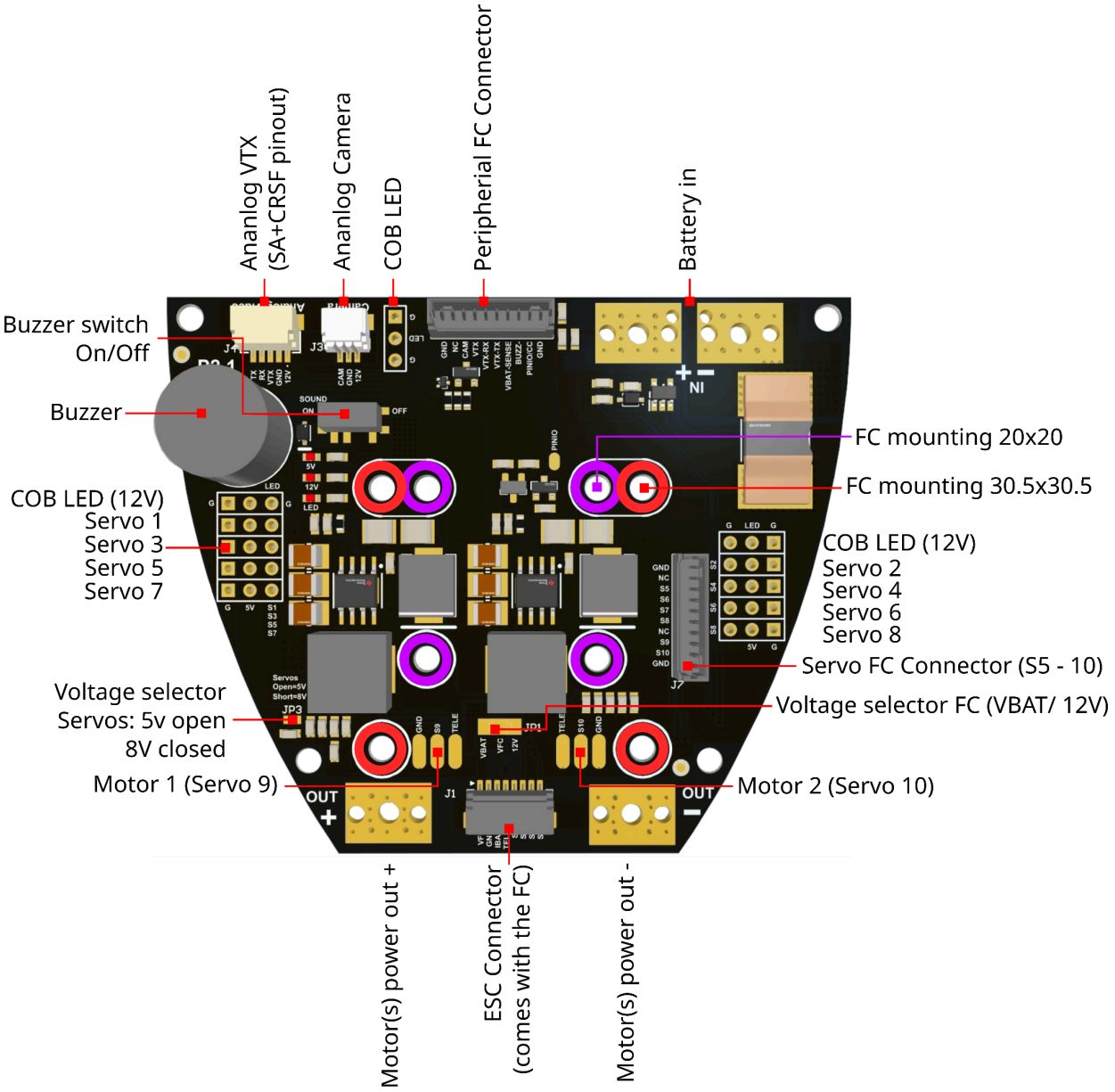
Ananlog VTX
(SA+CRSF pinout)
Ananlog Camera
COB LED
Peripherial FC Connector
Battery in
Buzzer switch
On/Off
Buzzer
FC mounting 20x20
FC mounting 30.5x30.5
COB LED (12V)
Servo 1
Servo 3
Servo 5
Servo 7
COB LED (12V)
Servo 2
Servo 4
Servo 6
Servo 8
Servo FC Connector (S5 - 10)
Voltage selector
Servos: 5v open
8V closed
Voltage selector FC (VBAT/ 12V)
Motor 1 (Servo 9)
Motor 2 (Servo 10)
Motor(s) power out +
ESC Connector
(comes with the FC)
Motor(s) power out -

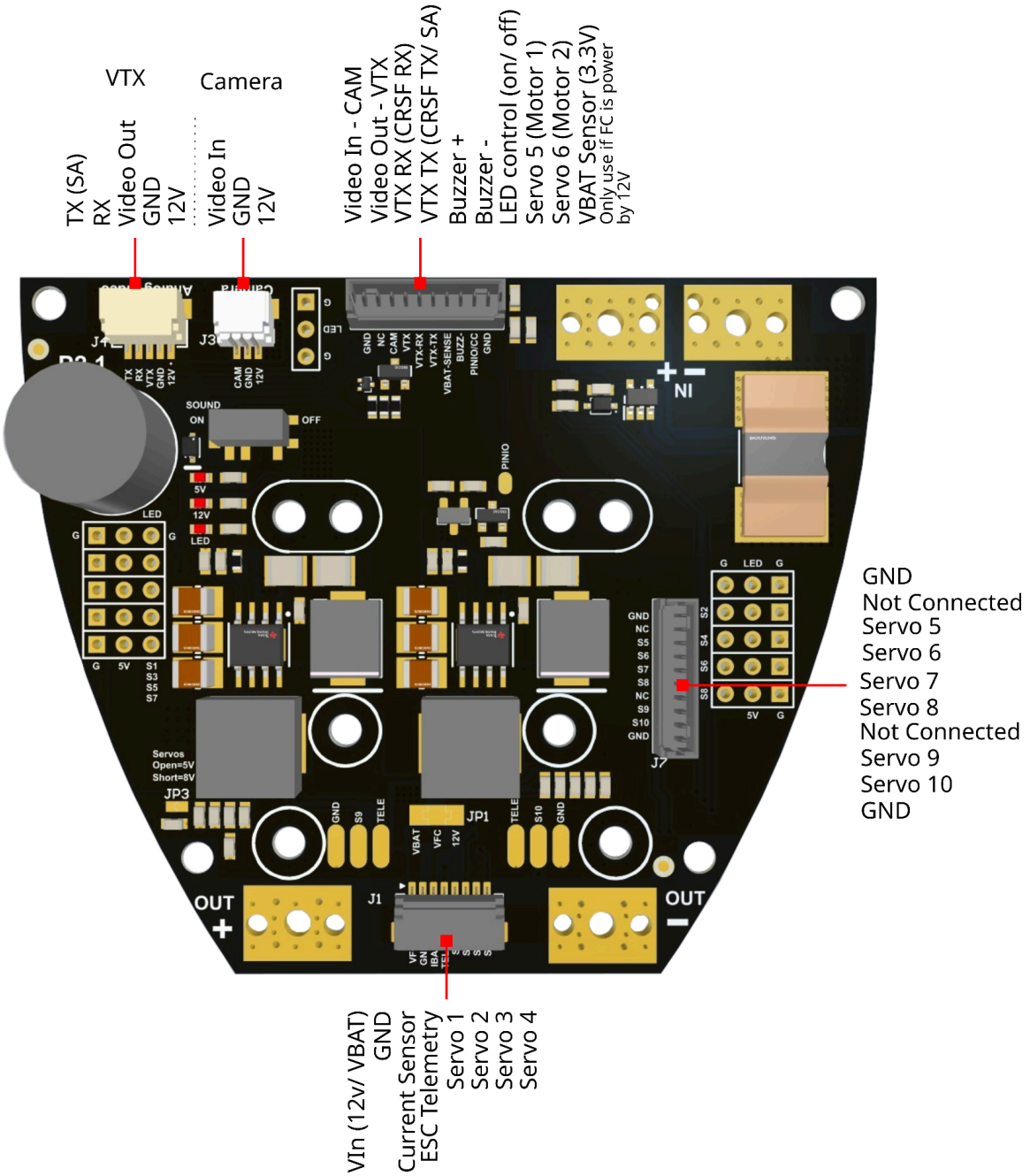

ESC Connector

LED Connection

The three LED connectors are powered by the internal 12V supply and controlled by the PINIO pin on the peripheral connector. If you use a LUCID F4 FC, the *CamControl* pins should be used for control.

If you want to do it directly with your CROSSFIRE/ TRACER rx, select GPIO in the receiver output map menu and connect it to the pin header or the solder pad labeled “PINIO” next to it.