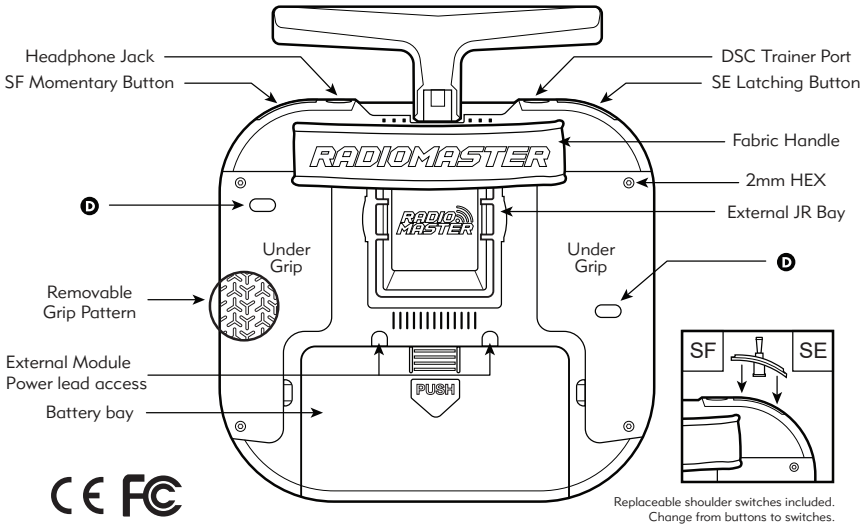

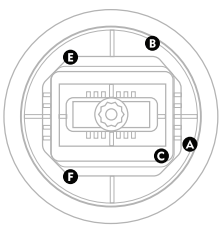

A	B	C
L-R Mode-1, 2 CW to disable self-centering, CCW to enable	**Vertical tension** (Up-Down) CW to increase, CCW to decrease.	**Horizontal tension** (Left-Right) CW to increase, CCW to decrease.
D	**E**	**F**
Throttle Stick tension CW to increase, CCW to decrease.	**Up Stick Travel** (38-54° degrees) CW to decrease, CCW to increase.	**Down Stick Travel** (38-54° degrees) CW to decrease, CCW to increase.

FCC ID: 2BBP3-TX15

FCC Compliance Statement
This device complies with Part 15 of the FCC Rules. Operation is subject to the following two conditions:

❶ This device may not cause harmful interference.
❷ This device must accept any interference received, including interference that may cause undesired operation.

Warning: Any changes or modifications not expressly approved by the party responsible for compliance could void the user's authority to operate this equipment.

Note: This equipment has been tested and found to comply with the limits for a Class B digital device, pursuant to Part 15 of the FCC Rules. These limits are designed to provide reasonable protection against harmful interference in a residential installation.

This equipment generates, uses, and can radiate radio frequency energy. If not installed and used per the instructions, it may cause harmful interference to radio communications. However, there is no guarantee that interference will not occur in a particular installation.

If this equipment does cause harmful interference to radio or television reception (which can be determined by turning the equipment off and on), the user is encouraged to try to correct the interference by one or more of the following measures:

- Reorient or relocate the receiving antenna.
- Increase the separation between the equipment and the receiver.
- Connect the equipment to an outlet on a circuit that is different from the one to which the receiver is connected.
- Consult the dealer or an experienced radio/TV technician for assistance.

This equipment complies with FCC radiation exposure limits set forth for an uncontrolled environment. It should be installed and operated with a minimum distance of 20 cm between the radiator and your body.

RADIOMASTER TX15

2.4 GHZ

Quick Start Guide

Voltage Range
6.6-8.4V DC

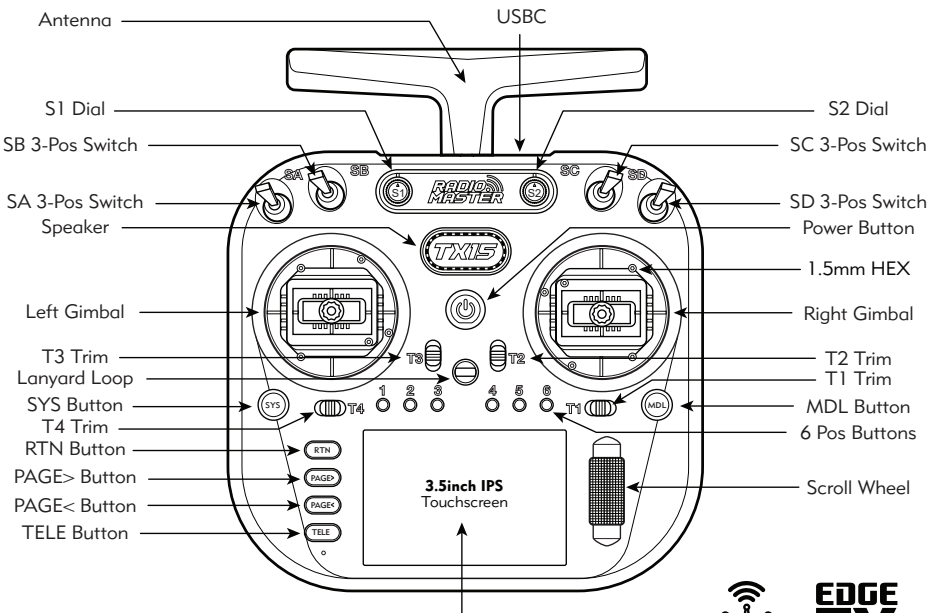

BATTERIES NOT INCLUDED

ExpressLRS

EDGE TX

SPECIFICATIONS

• Item:	TX15 / TX15 MAX Radio	• Gimbals:	V5 or AG02
• Size:	178*168*81mm	• Control distance:	Max 2Km
• Weight:	605g / 672g MAX (without battery)	• Channels:	Max 16 channels (RX dependent)
• Frequency:	ISM 2.4GHz or Sub-G 900	• Battery Options:	7.4V 2-cell Lithium-Polymer or 2x 3.7V 18650 Lithium-Ion
• Max Current:	875mA		
• Voltage Range:	6.6-8.4V DC	• LCD Screen:	3.5inch IPS Touchscreen
• Radio Firmware:	EdgeTX (requires version 3.0.0 or later)	• External module:	JR bay
• Wireless Firmware:	ExpressLRS	• Upgrade Method:	USB
• Gimbal Sticks	M4		

INTRODUCTION

Thank you for choosing the RadioMaster TX15, a versatile remote control system featuring dual-band capabilities with 2.4GHz technology. Whether you're a beginner or a seasoned professional, the TX15 is designed to meet your needs, offering precision, flexibility, and reliability.

Please read this guide carefully before operating your new remote to ensure safe and optimal use. As we continually enhance our software and hardware, updated versions of this manual may be released. For the latest information and resources, please visit our website.

Follow the links for more detailed guides, firmware updates, and additional resources.

-The RadioMaster team

SAFETY INFORMATION

Many remote-control models are equipped with powerful motors and sharp propellers. When using or maintaining models, proceed with caution. When performing assembly or maintenance, make sure to disconnect the power to the model and remove the propellers.

Do not operate the TX15 remote control system under the following conditions:

- In severe weather or strong windy conditions, such as rain, hail, snow, storms or electromagnetic environments.
- In any situation where visibility is limited.
- In areas where people, property, high-voltage power lines, public roads, vehicles or animals may be present.
- If you feel tired or unwell, or under the influence of drugs or alcohol.
- If the remote control or model seems to be damaged or not working properly.
- In areas with high 2.4GHz interference or where 2.4GHz radio is prohibited.
- When the radios battery voltage is too low to be used.
- In areas where local regulations prohibit the use of models.

IMPORTANT

ANTENNA: Install the provided antenna in the top of the radio BEFORE installing batteries and turning on the radio. **DO NOT** operate the radio without the antenna installed and the internal RF module powered on. Doing so will damage the internal RF module and will not be covered under warranty.

FIRMWARE: The TX15 is pre-installed with the most stable firmware at the factory at time of release. please only attempt to update the firmware if you are confident in the process. Incorrect firmware updates may cause the remote control to become inoperable.

MANUAL & FIRMWARE DOWNLOAD

TX15 is pre-installed with factory approved EdgeTX firmware. To download the latest software manual, please visit the RadioMaster website:
www.radiomasterrc.com

Further firmware information:
EdgeTX: **www.edgetx.org**
ExpressLRS: **www.expresslrs.org**

BATTERIES & CHARGING

TX15 has a built-in USB-C charging function for 3.7V lithium batteries. The charging circuit is only designed to charge 2x 3.7V Li-ion 18650 or 2x 3.7V Li-Poly batteries (2s 7.4v Lipo battery pack), the nominal battery voltage is 3.7V, the charged voltage is 4.2V/Cell.

DO NOT use LiFE battery packs or 18650 lithium-ion batteries with a nominal voltage of 3.6v with a fully charged voltage of 4.10V. Charging the incorrect type of battery may damage the charger or cause a fire.

If using Li-ion, ensure the cells are not protected and are button-top cells.

Please check the voltage and condition of the battery regularly and never charge unattended. Always charge in a safe area away from combustible materials. Refrain from charging if the remote control gets wet or damaged in any way. **DO NOT** charge with the polarity reversed.

RadioMaster does not assume any responsibility for any adverse consequences caused by the use or misuse of this product.

MODEL & PROTOCOL SELECTION

ExpressLRS Version

The TX15 is equipped with a built-in dual-band, dual-frequency ExpressLRS RF module, offering compatibility with a wide range of receivers:

- 2.4GHz receivers

Packet Rate Selection:
To select the appropriate Packet Rate on your TX15 remote control, follow these options based on the receiver type:

- 50Hz-500Hz 2.4G:
For binding with any ExpressLRS 2.4GHz receiver.

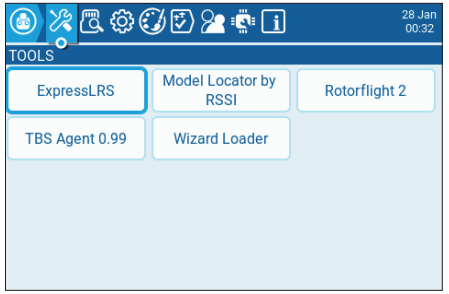

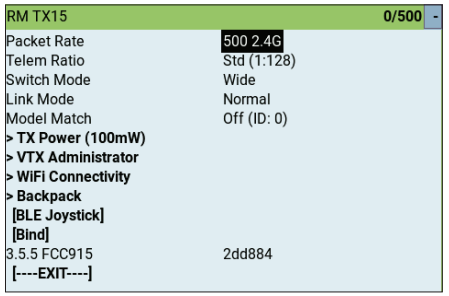

BIND INSTRUCTIONS

1. **TURN OFF** the transmitter.
2. Cycle power to the receiver 3 times, the receiver LED will flash twice - indicating bind mode.
3. **TURN ON** the transmitter, press the **SYS** button and choose **ExpressLRS LUA** under the **TOOLS** menu. Scroll to **[Bind]** and press enter.
4. The LED on the receiver should now be solid, indicating a successful bind.

WARRANTY & REPAIR

If you experience any issues with your TX15 hardware, please retain your proof of purchase for warranty purposes. To initiate a warranty claim or seek repair assistance, follow these steps:

1. Contact Your Retailer: Contact the retailer where you purchased your TX15 for warranty support.

2. Visit Our Warranty Support Page: For additional assistance or to contact our support team, visit RadioMaster Warranty Support:
www.radiomasterrc.com/contact

ANTENNA SEPARATION DISTANCE

When operating your RadioMaster transmitter, please be sure to maintain a separation distance of at least 20 cm between your body (excluding fingers, hands, wrists, ankles and feet) and the antenna to meet RF exposure safety requirements as determined by FCC regulations.

CAUTION

Changes or modifications not expressly approved by the party responsible for compliance could void the user's authority to operate the equipment. This product contains a radio transmitter with wireless technology which has been tested and found to be compliant with the applicable regulations governing a radio transmitter in the 2.400GHz to 2.4835GHz frequency range.

EU SIMPLE DECLARATION OF CONFORMITY

RadioMaster declares the radio equipment TX15 is in compliance with EU directives Directive 2014/53/EU.

Manufacturer by
ShenZhen RadioMaster Co., Ltd
3th Floor, Yangtian Building, No. 18 Yangtian Road, Xin'an Street, Baoan District, Shenzhen, Guangdong

WWW.RADIOMASTERRC.COM

A1.5

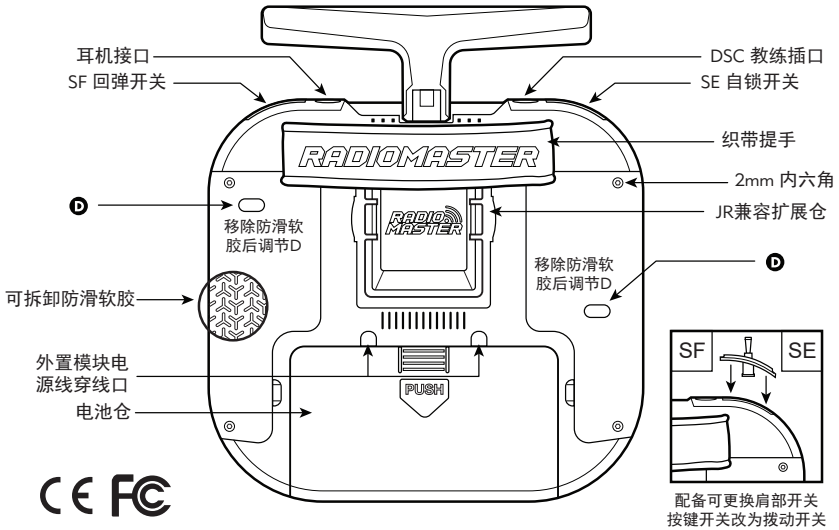

配备可更换肩部开关
按键开关改为拨动开关

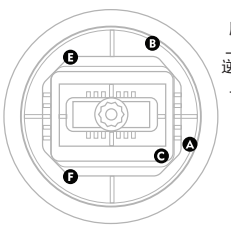

A	B	C
上下有/无弹力设置 顺时针扭动螺丝到底时， 上下旋转变无弹力状态。 逆时针扭动螺丝到顶面时， 上下旋转变有弹力状态。	上下弹力调节 顺时针扭动螺丝， 上下弹力变大。 逆时针扭动螺丝， 上下弹力变小。	左右弹力调节 顺时针扭动螺丝， 左右弹力变大。 逆时针扭动螺丝， 左右弹力变小。
D	**E**	**F**
油门阻尼调节 当上下无弹力状态时， 顺时针加重阻尼， 逆时针减小阻尼。	设置下旋转角度 顺时针扭动螺丝， 旋转角度变小。 逆时针扭动螺丝， 旋转角度变大。 角度范围（38-54°）	设置上旋转角度 顺时针扭动螺丝， 旋转角度变小。 逆时针扭动螺丝， 旋转角度变大。 角度范围（38-54°）

FCC ID: 2BBP3-TX15

FCC 合规声明

本设备符合美国联邦通信委员会（FCC）第15部分的相关规定。操作须符合以下两个条件：

1. 本设备不得产生有害干扰；
2. 本设备必须接受所接收到的任何干扰，包括可能引起设备异常工作的干扰。

警告：未经负责合规的相关方明确批准而进行的任何更改或修改，可能导致用户丧失操作本设备的合法权限。

说明：本设备经过测试，符合FCC第15部分中B类数字设备的限制。这些限制旨在为家庭安装环境提供合理的防干扰保护。

本设备会产生、使用并可能发射射频能量，如未按照说明书正确安装和使用，可能会对无线电通信造成有害干扰。然而，并不能保证在特定安装环境中不会发生干扰。

若本设备对无线电或电视接收造成有害干扰（可通过开启和关闭设备加以判断），建议用户通过以下一种或多种方式尝试排除干扰：

- 调整或重新定位接收天线；
- 增加设备与接收器之间的距离；
- 将设备连接到与接收器所连接电路不同的电源插座上；
- 咨询经销商或具有经验的无线电/电视技术人员以获取帮助。

本设备符合FCC关于非受控环境下射频辐射的暴露限制要求。安装和使用时，辐射源与人体之间应保持至少20厘米的最小距离。

RADIOMASTER TX15

2.4 GHZ

快速操作指南

电压范围
6.6-8.4V DC

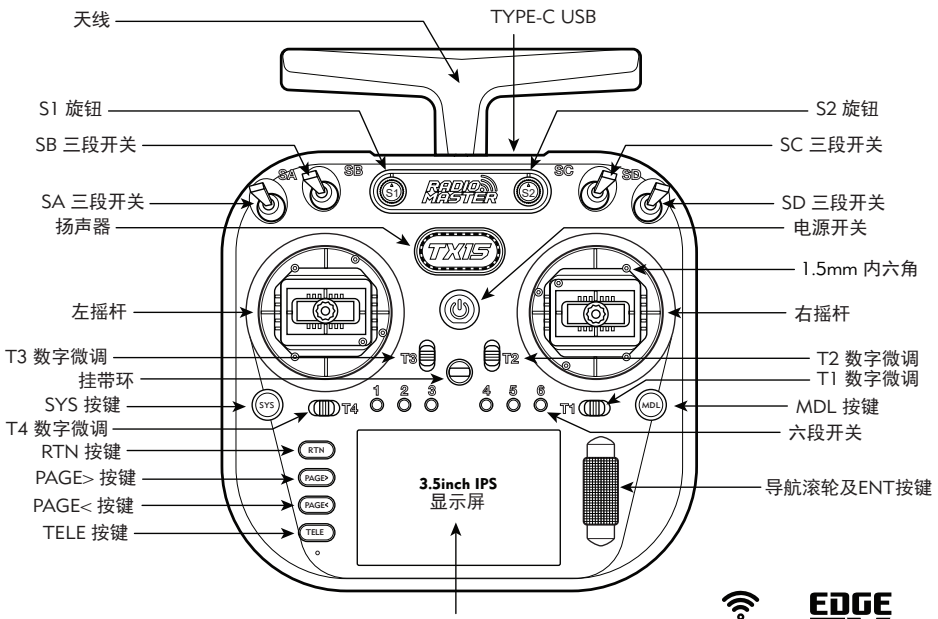

电池不包含在内

ExpressLRS

EDGE TX

技术规格

- 产品型号：TX15 / TX15 MAX遥控器
- 尺寸：178 × 168 × 81 mm
- 重量：605g / 672g MAX版（不含电池）
- 工作频率：ISM 2.4GHz
- 最大电流：875mA
- 电压范围：6.6 – 8.4V DC
- 遥控器固件：EdgeTX（需3.0.0或更高版本）
- 射频固件：ExpressLRS
- 摇杆头螺丝：M4
- 摇杆型号：V5或AG02
- 最大控制距离：2公里（视接收机情况而定）
- 通道数：最多16通道（依接收机支持情况）
- 电池选项：7.4V 2节锂聚合物电池，或2节3.7V 18650锂离子电池
- 显示屏：3.5英寸IPS触控屏
- 外部模块接口：JR兼容扩展仓
- 升级方式：USB

简介

感谢您选择RadioMaster TX15遥控器。TX15是一款多功能遥控系统，具备2.4GHz ExpressLRS 可靠的性能，适用于多种应用场景。

在操作本设备前，请仔细阅读本指南，以确保安全并获得最佳使用效果。我们会持续更新软件和硬件，因此可能会发布新版用户手册。获取最新资料请访问官方网站。

TX15基于强大的EdgeTX平台开发，支持与各类项目无缝集成。您可通过文中链接获取详细操作指南、固件升级与技术资源。

—— RadioMaster 团队

安全须知

许多遥控模型配备强力电机和锋利螺旋桨，请在使用或维护时务必小心。在组装或维护过程中，请断开电源并卸下螺旋桨。

在以下情况下，请勿操作TX15遥控系统：

- 在恶劣天气或强风条件下，例如雨，冰雹，下雪，暴风雨或电磁环境中。
- 在能见度有限的任何情况下。
- 在可能存在人员、财产、电力高压线、公共道路、有车辆或动物的区域。
- 如果您感到疲倦或不适，或在药物或酒精的影响下。
- 如果遥控器或模型似乎已损坏或无法正常工作。
- 在2.4GHz干扰较大的区域或禁止使用2.4GHz无线电的地方。
- 当电池电压太低而无法使用时。
- 在当地法规禁止使用遥控模型的区域。

警告

天线：在安装电池并开启遥控器之前，请务必先将随机附带的天线安装至遥控器顶部。切勿在未安装天线或内部 RF 模块未开启的状态下使用，否则将损坏内部模块，该情况不在保修范围内。

固件：TX15出厂已预装稳定版本的 EdgeTX 固件。除非您熟悉操作流程，否则请勿轻易更新固件。不当更新可能导致遥控器失效。

手册和固件下载

TX15出厂已预装官方认证的EdgeTX固件。您可访问RadioMaster官方网站下载最新版用户手册：

www.radiomasterrc.com

更多固件信息：
EdgeTX官网: **www.edgetx.org**
ExpressLRS官网: **www.expresslrs.org**

电源和充电注意事项

TX15内置USB-C充电功能，适用于2节3.7V锂电池。充电电路仅支持2节3.7V锂离子18650 电池或2节7. 4V锂聚合物电池（2S）。电池标称电压为3.7V，满电电压为4.2V/节。

请勿使用LiFe磷酸铁锂电池或3.6V标称、4.10V满电的18650电池。使用不兼容电池可能导致损坏或起火。

如使用锂离子电池，请确保使用无保护板、尖头18650电池。

请定期检查电池电压和状态，并切勿无人看管充电。务必在远离易燃物的安全环境下充电。如遥控器受潮或受损，请勿进行充电，亦不得反接极性。

RadioMaster不对因产品误用或不当操作造成的后果承担任何责任。

模型选择及协议选择

TX15内置ExpressLRS射频模块，兼容多种类型的ELRS接收机。

- 支持 2.4GHz 接收机。

数据包速率选择：

要在 TX15 遥控器上选择合适的数据包速率，请根据所使用的接收机类型选择以下选项：

- 50Hz–500Hz（2.4G）：
适用于与任意 ExpressLRS 2.4GHz 接收机进行绑定。

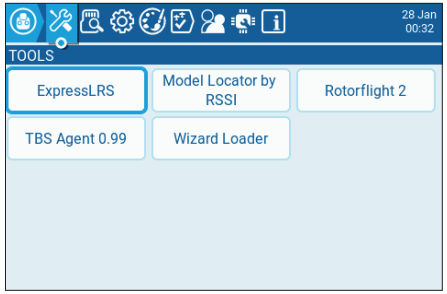

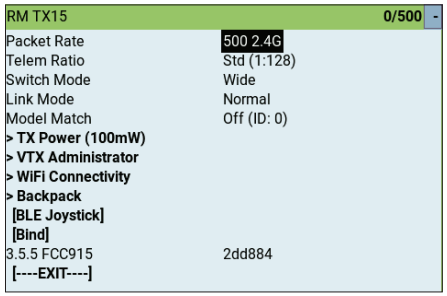

对码方式

1. 关闭发射机。
2. 给接收器循环通电3次，接收器LED持续双闪，表示绑定模式。
3. 打开遥控器，长按SYS按钮，在TOOLS菜单下选择ExpressLRS LUA。滚动到[BIND]并按enter键。
4. 接收器上的LED现在是常亮的，表明绑定成功。

保修及维修

若TX15出现硬件故障，请保留购买凭证以便享受保修服务。申请保修或维修支持，请按以下步骤操作：

1、联系销售商：与您购买TX15的销售商联系，获取保修支持；
2、访问售后支持页面：如需进一步帮助，请访问RadioMaster保修支持页面：
www.radiomasterrc.com/contact

天线安全距离

操作TX15遥控器时，请保持天线与人体（手指、手掌、手腕、脚踝、脚除外）至少20厘米的距离，以满足FCC无线电频暴露安全要求。

警告

未经批准擅自修改设备可能导致使用授权无效。本产品包含无线发射器，符合2.400GHz至2.4835GHz范围内的相关法规。

欧盟认证合格声明

RadioMaster特此声明：本公司生产的 TX15 无线电设备符合欧盟指令2014/53/EU的相关要求。
制造商信息：
深圳阿尔木创新科技有限公司
地址：深圳市宝安区新安街道扬田路扬田大厦3楼
官方网站：**www.radiomasterrc.com**

RADIO MASTER

WWW.RADIOMASTERRC.COM