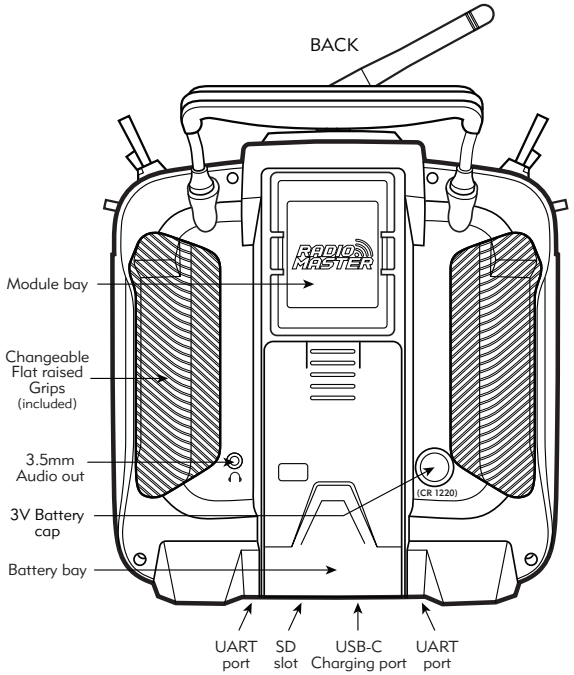

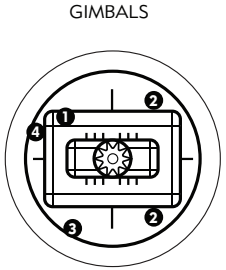

❶ **Horizontal tensioner** (Left-Right) CW to increase, CCW to decrease.

❷ **Stick travel limiter** CW to increase, CCW to decrease.

❸ **Vertical tensioner** (Up-Down) CW to increase, CCW to decrease.

❹ **Gimbal mode** CW to disable self-centering, CCW to enable

CAUTION

Changes or modifications not expressly approved by the party responsible for compliance could void the user's authority to operate the equipment. This product contains a radio transmitter withwireless technology which has been tested and found to be compliant with the applicable regulations governing a radio transmitter in the 2.400GHz to 2.4835GHz frequency range.

ANTENNA SEPARATION DISTANCE

When operating your RadioMaster transmitter, please be sure to maintain a separation distance of at least 20 cm between your body (excluding fingers, hands, wrists, ankles and feet) and the antenna to meet RF exposure safety requirements as determined by FCC regulations.

WWW.RADIOMASTERRC.COM

EU SIMPLE DECLARATION OF CONFORMITY

RadioMaster declares the radio equipment TX16S MKII is in compliance with EU directives Directive 2014/53/EU.

Manufacturer by
ShenZhen RadioMaster Co., Ltd
4th Floor, Yangtian Building, No. 18 Yangtian Road, Xin'an Street, Baoan District, Shenzhen, Guangdong

FCC ID: 2AV3G-TX16S

FCC Information
This equipment has been tested and found to comply with the limits for Part 15 of the FCC rules. This device complies with part 15 of the FCC rules. Operation is subject to the following two conditions: (1) This device may not cause harmful interference, and (2) this device must accept any interference received, including interference that may cause undesired operation.

Full text of the declaration of conformity is available at:
www.radiomasterrc.com

RADIOMASTER TX16S MKII

2.4 GHZ

Quick Start Guide

Voltage Range
6.6-8.4V DC

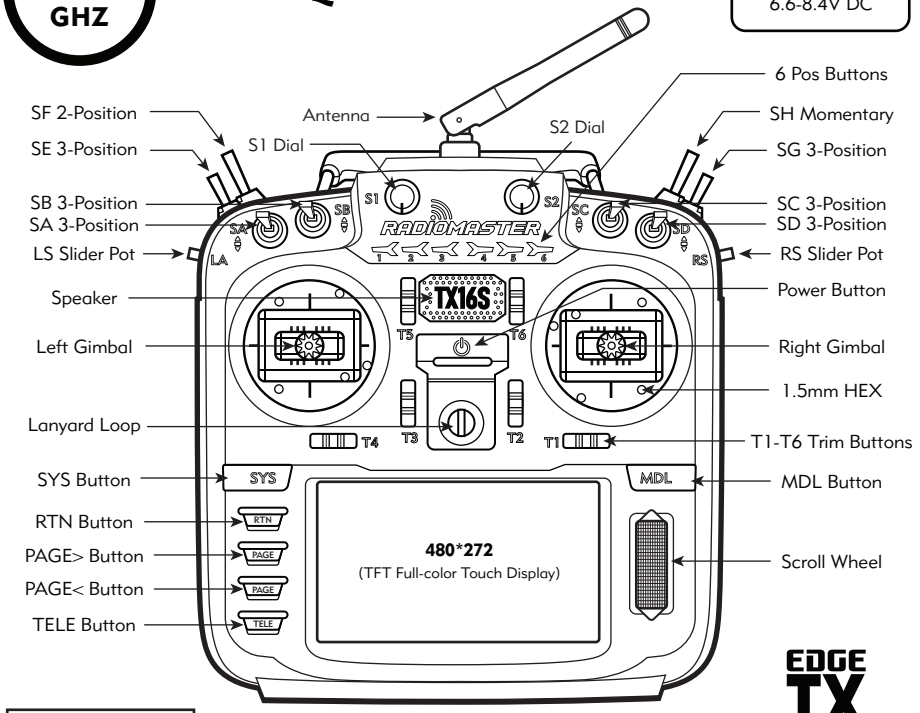

BATTERIES NOT INCLUDED

EDGE TX

SPECIFICATIONS

- Item: TX16S MKII Radio
- Size: 287*129*184mm
- Weight: 750g (without battery)
- Frequency: 2.400GHz-2.480GHz
- Internal RF Options: 4-in-1 or ELRS 2.4GHz
- Supported Protocols: Module dependent
- Firmware: EdgeTX (Supports OpenTX)
- Voltage Range: 6.6-8.4V DC
- Control distance: Max 2km
- Channels: Max 16 channels (RX dependent)
- Working current: 400mA
- TFT Display: 4.3-inch full-color touch
- Gimbals: Hall gimbals (AG01 Optional)
- External module: JR / FrSKY / CRSF compatible
- Upgrade Method: USB / SD card & EdgeTX Companion PC software

INTRODUCTION

Thank you for purchasing the RadioMaster TX16S MKII Multi-protocol radio system. RadioMaster is proud to bring this ground-breaking product to the market and would like to thank customers just like you and the community for making this dream possible. The MKII version has had several improvements thanks to feedback from users like you. Please take a moment to read this quick start reference before using your new TX16S MKII radio.

Visit our website for the most up to date information. TX16S MKII remote control is suitable for all types of fixed-wing aircraft, gliders, helicopters, cars, boats, robotics, multi-rotor aircraft and anything else you might create, if you can build it RadioMaster can control it.

The TX16S MKII uses a powerful operating system called EdgeTX, for more information visit the links.

-The RadioMaster team

SAFETY INFORMATION

Many radio control models are equipped with powerful motors and sharp spinning propellers. Please exercise caution when working on models. Ensure power is disconnected from your models and remove propellers when performing maintenance.

Do not operate the TX16S MKII remote control system under the following conditions:

- In severe weather or strong windy conditions, such as rain, hail, snow, storms or electromagnetic environments.
- In any situation where visibility is limited.
- In areas where people, property, high-voltage power lines, public roads, vehicles or animals may be present.
- If you feel tired or unwell, or under the influence of drugs or alcohol.
- If the remote control or model seems to be damaged or not working properly.
- In areas with high 2.4GHz interference or where 2.4GHz radio is prohibited.
- When the radios battery voltage is too low to be used.
- In areas where local regulations prohibit the use of aviation models.

IMPORTANT

FIRMWARE: The TX16S MKII is pre-installed with the most stable firmware at the factory at time of release. please only attempt to update the firmware if you are confident in the process. Incorrect firmware updates may cause the remote control to become inoperable.

MANUAL & FIRMWARE DOWNLOAD

TX16S MKII is pre-installed with factory approved EdgeTX firmware. To download the latest software manual, please visit the RadioMaster website: **www.radiomasterrc.com**

Further firmware information:
EdgeTX: **www.edgetx.org**
ExpressLRS: **www.expresslrs.org**
Multi Protocol Module: **www.multi-module.org**

BATTERIES & CHARGING

The TX16S MKII has built in USB-C charging for 3.7v Lithium cells. The Charging circuit is designed for 2x 3.7v Li-ion 18650 unprotected cells or 2x 3.7v Li-poly cells (2s 7.4v LiPO pack) only with a nominal cell voltage of 3.7v and maximum charge capacity of 4.2v.

APPROVED FOR USE

2x 3.7v Li-ION 18650 (7.4v using supplied tray)
2x 3.7v Li-ION 21700 (Assembled as 7.4v 2s Battery pack)
2x 3.7v Lithium-polymere (Assembled as 7.4v 2s Battery pack)

DO NOT USE

2s 6.6v LiFE battery pack, 18650 lithium-ion cells with a nominal voltage of 3.6v or LiFEP04 18650 Round cells. Using the built in USB charger with incorrect battery types and voltage may cause damage to the remote control or fire.

If using Li-ion, ensure the cells are not protected and are button-top cells.

Check the health and condition of the batteries regularly. **DO NOT** use damaged cells. Never charge your device unattended. Always charge in a safe area away from flammable materials. If the remote control gets wet or damaged in any way, **DO NOT** charge it.

RadioMaster does not assume any responsibility for any adverse consequences caused by the use or misuse of this product.

MODEL & PROTOCOL SELECTION

Multi-protocol Module

A wide variety of modules is available for TX16S MKII units with the 4-in-1 module. To find out whether a certain protocol would work with your radio, please visit the multi module website.

Please note that new protocols will be constantly updated and added to the latest firmware. Some new protocols may require firmware upgrades

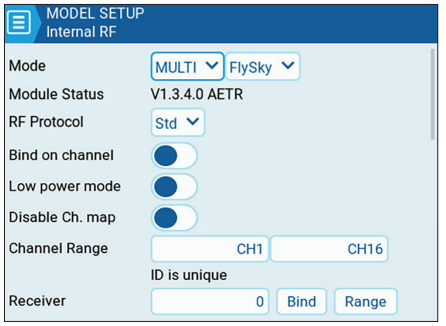

- Long press the **MDL** button to enter the model settings, select **MULTI** in the **SETUP** page, and select the protocol to be used in the sub-options. The system will automatically turn on the corresponding RF module according to the RF protocol you selected.
- Bind **[BND]** is used to start the binding process.
- Range **[RNG]** button can reduce the power to 1/30 to facilitate testing of remote-control distance.

ATTENTION

4in1/CC2500 Users: The receiver you are using may require frequency tuning, follow this link to tune before flight.

www.multi-module.org/using-the-module/frequency-tuning

WARRANTY & REPAIR

If there is any problem with your remote control hardware, please keep the proof of purchase andcontact the retailer where you purchased the TX16S MKII.

You may also visit our warranty support page:
www.radiomasterrc.com/contact

ELRS Version

TX16S MKII ELRS units are equipped with an internal ELRS module, Transmitting power Default 100mW. In non-extreme circumstances, 100mW output at 500Hz update rate is recommended, as higher RF output and update rates may significantly reduce battery life and generate excessive heat.

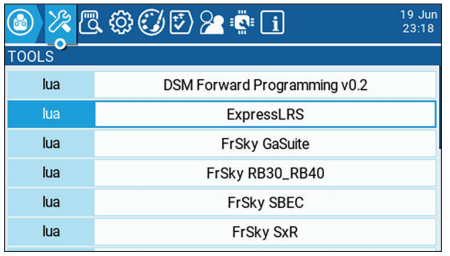

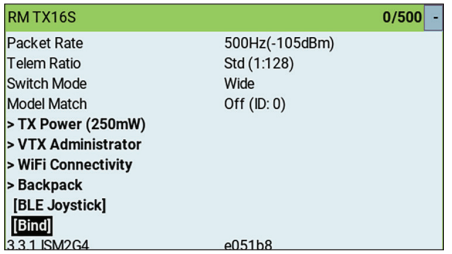

BIND INSTRUCTIONS

1. **TURN OFF** the transmitter.
2. Cycle power to the receiver 3 times, the receiver LED will flash twice - indicating bind mode.
3. **TURN ON** the transmitter, long press the **SYS** button and choose **ExpressLRS LUA** under the **TOOLS** menu. Scroll to **[Bind]** and press enter.
4. The LED on the receiver should now be solid, indicating a successful bind.

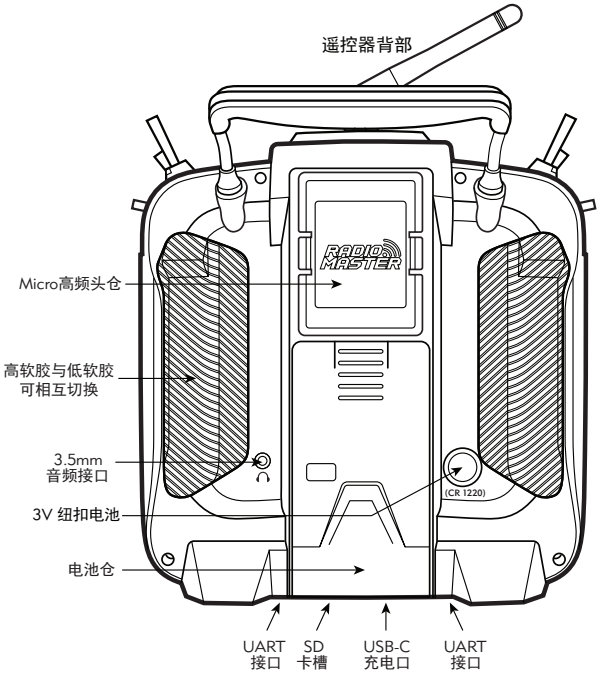

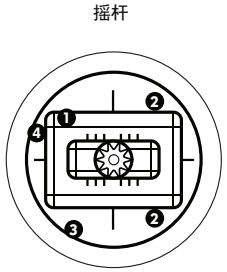

❶ 水平弹力调节
顺时针扭动，左右弹力变大；逆时针扭动，左右弹力变小。

❷ 行程调节
顺时针扭动，旋转角度变小；逆时针扭动，旋转角度变大。

❸ 上下弹力调节
顺时针扭动，上下弹力变大；逆时针扭动，上下弹力变小。

❹ 上下有/无弹力设置
顺时针扭到低时，上下旋转变无弹力状态；逆时针扭平顶面时，上下旋转变有弹力状态。

警告

未经负责合规方明确批准的更改或修改可能会使用户丧失操作设备的权限。
本产品包含具有天线技术的无线电发射器，该无线电发射器已经过测试，符
合适用于2.400GHz至2.4835GHz频率范围内的无线电发射器的适用法规。

安全的天线距离

操作RadioMaster发射器时，请确保您的身体（不包括手指，手，腕，脚踝和脚）与天线之间保持至少20cm的距离，以符合FCC法规确定的RF暴露安全要求。

欧盟认证合格声明

RadioMaster无线电设备TX16S符合欧盟指令2014/53/EU。符合性认证声明的全文可在以下

制造商
深圳RadioMaster有限公司
广东省深圳市宝安区新安街道72区杨田路扬田大厦4楼

FCC ID: 2AV3G-TX16S　2A337-TX16S

FCC 警示
该设备已经过测试，符合FCC规则第15章的规定。操作必须符合以下两个条件：
（1）此设备不会造成有害干扰
（2）此设备必须接受收到的任何干扰，包括可能导致意外操作的干扰。
符合性声明的全文可在以下网站上找到：
www.radiomasterrc.com

WWW.RADIOMASTERRC.COM

RADIOMASTER TX16S MKII

2.4 GHZ

快速操作指南

电压范围
6.6-8.4V DC

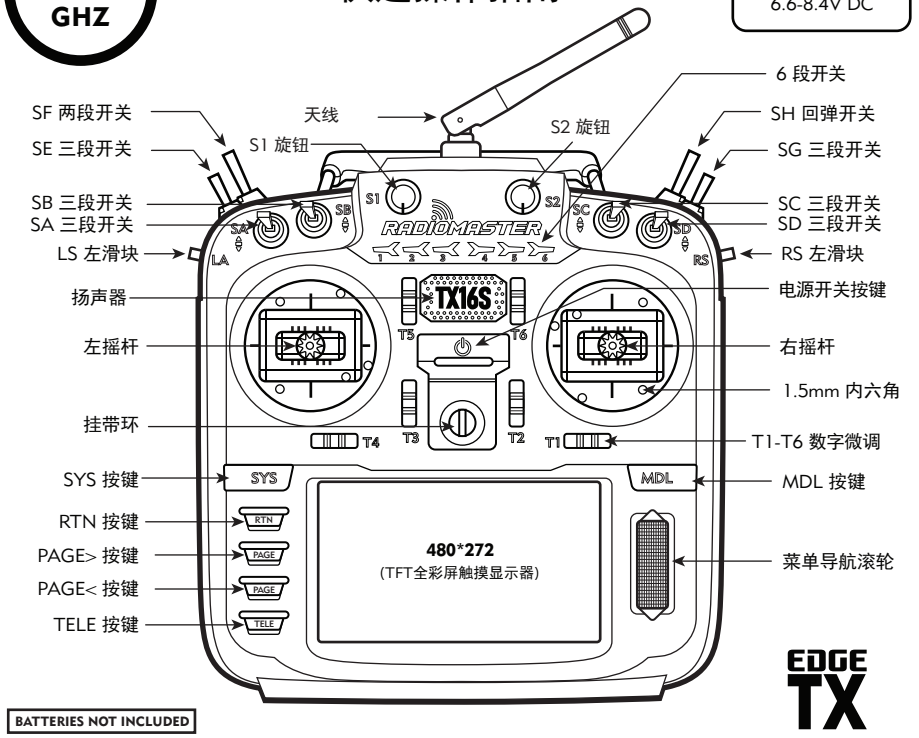

BATTERIES NOT INCLUDED

EDGE TX

SPECIFICATIONS

- 产品型号：TX16S遥控器
- 规格尺寸： 286.9*128.9*183.8毫米
- 重量：750克（不含电池）
- 传输频率：2.400GHz-2.480GHz
- 发射器模块：四合一多协议高频模块（CC2500 CYRF6936 A7105 NRF2401）ExpressLRS高频模块（ELRS）、（四合一或ELRS模块视硬件版本而定）
- 工作电流：400mA
- 控制距离：最大2km
- 工作电压：6.6-8.4V DC
- 开源固件：EdgeTX（遥控器）
- 通道数：最多16个通道（取决于接收器）
- 显示：4.3英寸TFT全彩显示屏，分辨率为480 * 272
- 摇杆：非接触式3D矢量霍尔操纵杆
- 外置模块：JR/FrSKY兼容模块插座
- 升级方法：支持USB在线/SD卡离线升级

简介

感谢您购买RadioMaster TX16SMKII 2.4g遥控系统。 该系统用途广泛，可供初学者和专业人士使用。 为了确保正确、安全地使用本产品，请在使用前仔细阅读本使用说明书。 由于版本升级，已经进行了更改。 本手册中包含的信息如有更改，恕不另行通知。

TX16SMKII遥控器适用于所有类型的固定翼、滑翔机、直升机和多旋翼飞机。 可以根据使用的航空器选择型号类型，并可以使用各种混合功能。

–RadioMaster 团队敬上.

安全须知

许多遥控模型都配备了强大的电机和锋利的螺旋桨。使用模型时，请谨慎行事。进行组装或维护时，请确保已断开模型的电源并卸下螺旋桨。

在以下情况下，请勿操作TX16S遥控系统：
- 在恶劣天气或强风条件下，例如雨，冰雹，下雪， 暴风雨或电磁环境中。
- 在能见度有限的任何情况下。
- 在可能存在人员、财产、电力高压线、公共道路、有车辆或动物的区域。
- 如果您感到疲倦或不适，或在药物或酒精的影响下。
- 如果遥控器或模型似乎已损坏或无法正常工作。
- 在2.4GHz干扰较大的区域或禁止使用2.4GHz无线电的地方。
- 当电池电压太低而无法使用时。
- 在当地法规禁止使用航空模型的区域。

警告

固件更新：TX16S在出厂时预装了最稳定的固件，请仅在您对更新过程有信心的情况下尝试更新固件。不正确的固件更新可能导致远程控制无法操作。

手册和固件下载

TX16S预装标准的EdgeTX固件。要下载最新的软件手册，请访问RadioMaster网站：

www.radiomasterrc.com

更多固件信息请访问：
EdgeTX: **www.edgetx.org**
ExpressLRS: **www.expresslrs.org**
Multi Protocol Module: **www.multi-module.org**

电源和充电注意事项

TX16S内置USB-C充电功能，可用于3.7v至4.2v的锂电池。该充电电路仅适用于2x3.7v锂离子18650电池或2x 3.7v Lipoly电池（2s 7.4v Lipo电池组），标称电池电压为3.7v，最大充电电压为4.2v。

不要使用标称电压为3.6v至4.10v的寿命电池组或18650锂离子电池。给不正确的电池充电可能会损坏充电 器或引起火灾。请确保电池正负极未接反。

请定期检查电池的电压和状态，切勿在无人看管的情况下充电，在远离易燃材料的安全区域充电。如果遥控器被水打湿或损坏了，请勿给它充电。

RadioMaster不承担因使用或误用本产品而造成的任何不良后果。

模型选择及协议选择

内置4合1多协议高频模块

TX16SMKII附带四合一多协议高频模块，拥有并兼容很多不同协议， 要查看所有兼容协议的最新列表，
请访问：https://www.multi-module.org/。
请注意，新协议会不断更新并被添加到最新固件。

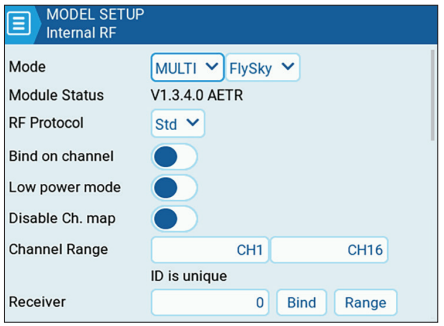

·请长按MDL按钮进入模型设置，在SETUP页面中
选择MULTI，并在子选项中选择需要使用的协议。系统根据您选择的射频协议，会自动开启对应的射频模块，同时关闭其它三个射频模块。系统在同一时间只会开启一个射频模块，以确保没有多余的无线电信号相互干扰。
·Bind按钮用于启动对频过程。
·Range按钮可将功率降低至1/30，以方便测试遥控距离。

注意

四合一和CC2500版本用户，您使用的接收机可能需要频率调节，请参照此链接进行调节

www.multi-module.org/using-the-module/frequency-tuning

保修及维修

如果您的遥控器硬件出现任何问题，请保留购买证明并与您购买TX16S的零售商联系。

也可以登录网站联系官方售后
www.radiomasterrc.com/contact

内置ELRS高频模块

TX16S推荐使用500Hz速率，更高的速率会降低控制距离，更高的功率会带来较大的发热和耗电，请您根据自身需求，合理调整功率及速率，以便达到性能和耗电的平衡。

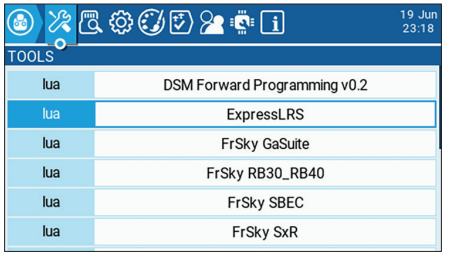

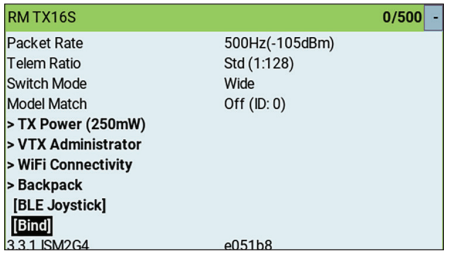

对码方式

1. 关闭发射机。
2. 给接收器循环通电3次，接收器LED闪烁2次，表示绑定模式。
3. 打开遥控器，长按SYS按钮，在TOOLS菜单下选择ExpressLRS LUA。滚动到[绑定]并按enter键。
4. 接收器上的LED现在应该是固态的，表明绑定成功。